ABB MEASUREMENT & ANALYTICS | DATA SHEET

SwirlMaster FSS430, FSS450

Swirl flowmeter

Measurement made easy

Reliable measurement of liquids, gases and steam in volume, mass or energy units

Flexible Connectivity

Easily integrate into any system:

- Analog and digital protocols: 4–20 mA/HART®, Modbus RTU®, PROFIBUS®, FOUNDATION Fieldbus®
- Ethernet-APL™: Modbus TCP®, PROFINET®, Webserver
- Optional Bluetooth® via SMART HMI for wireless access

Unique Measuring Principle – Maximum Accuracy, Minimal Effort

Install with confidence, even in challenging conditions:

- Minimal installation requirements – only 3×D straight pipe after a 90° elbow
- No need for piping modifications – optimized measuring ranges allow easy integration into existing pipework
- Best-in-class accuracy – ±0.5 % of reading across the full measuring range
- Long-term reliability – drift-free sensor design ensures lifetime stability

Fast Setup & Intuitive Operation

Save time from day one:

- Guided Easy Set-up menu for quick commissioning
- Autozero function for challenging environments
- Capacitive buttons for operation through the front glass
- Tool-free, programming-free electronics module exchange via Integrated SensorMemory

Built-in Diagnostics & Support

Stay ahead of trouble:

- Real-time self-diagnostics with clear text messages
- 24/7 support via “My Measurement Assistant”: error codes, tutorials, checklists

Integrated Energy Measurement

Measure more than just flow:

- Built-in temperature sensor
- Easy connection of external pressure transmitters
- Direct mass and energy calculation for steam and water

Overview – models

Sensor

1 Integral mount design

2 Remote mount design with transmitter

3 Remote mount design with dual sensor

Figure 1: SwirlMaster FSS430 / FSS450

Sensor		
Model number	**FSS430**	**FSS450**
Design	Integral mount design, remote mount design	
IP degree of protection in accordance with EN 60529	IP 66 / 67, NEMA 4X	
Measuring accuracy for liquids*	≤ ±0.5 % under reference conditions	
Measuring accuracy for gases and vapors*	≤ ±0.5 % under reference conditions	
Repeatability*	DN 15 ≤ ±0.3 %, from DN 20 ≤ ±0.2 %	
Permissible viscosity for liquids	DN 15 to 32: ≤ 5 mPa s, DN 40 to 50: ≤ 10 mPa s, from DN 80: ≤ 30 mPa s	
Measuring span (typical)	1:25	
Process connections	Flange DN 15 to 400 (0.5 in to 16 in)	Flange DN 15 to 400 (0.5 in to 16 in)
Inlet / outlet sections (typical)	Inlet section: 3 × DN, outlet section 1 × DN, see also **Inlet and outlet sections** on page 13.	
Temperature measurement	Resistance thermometer Pt100 class A optional, installed in Piezo sensor, can be retrofitted	Resistance thermometer Pt100 class A standard, fixed installation in Piezo sensor
Permissible measuring medium temperature	Standard: −55 to 280 °C (−67 to 536 °F), Optional: −55 to 350 °C(−67 to 662 °F)	Standard: −55 to 280 °C (−67 to 536 °F), Optional: −55 to 350 °C(−67 to 662 °F)
Wetted material		
• Sensor	Stainless steel, optional Hastelloy® C	
• Inlet / outlet guide bodies	Stainless steel, optional Hastelloy® C	
• Gasket	PTFE, optional Kalrez® or graphite	
• Sensor housing	Stainless steel, optional Hastelloy® C	
Sensor design	Piezo sensor with two pairs of sensors for flow measurement and vibration compensation	
Approvals for explosion protection	ATEX / IECEx, cFMus, NEPSI	

* Indication of accuracy in % of the measured value

… Overview – models

Transmitter

Model number	FSS430 / FSV430	FSS450 / FSV450
Display	• LCD indicator with four operating buttons (Standard, Order Code 'L1') • LCD indicator with four operating buttons and TTG (Through-the-glass) operation (Option, Order Code 'L2', only available for Modbus RTU®, PROFIBUS PA® and FOUNDATION Fieldbus®) • Smart LCD indicator* (Smart HMI) with four operating buttons and TTG (Through-the-glass) operation and Bluetooth™ configuration (Option, Order Code 'LE')	
Operating modes		
• Liquids	Operating volume, mass	Operating volume, mass
• Gases	Operating volume, standard volume, mass	Operating volume, standard volume, mass
• Steam	Operating volume, mass	Operating volume, mass, energy
Digital output (Not for devices with FOUNDATION Fieldbus® communication)	Optional, can be configured as pulse output, frequency output or alarm output via software	Standard, can be configured as pulse output, frequency output or alarm output via software
Inputs for external sensors (Only for devices with HART® communication)	• HART® input** for external pressure or temperature transmitter communicating in HART burst mode	• Analog input 4 to 20 mA for external pressure- / temperature transmitter or density signal • HART® input** for external pressure- / temperature transmitter communicating in HART burst mode
Current output, communication	4 to 20 mA, HART® (HART 7), Modbus RTU®, PROFIBUS PA®, FOUNDATION Fieldbus®, Ethernet-APL™ with PROFINET®, Modbus TCP® and Webserver over Ethernet communication	
SensorMemory	Saves sensor & process parameters for easy start-up after transmitter exchange	
Housing material	Aluminum (copper content < 0.3 %), epoxy resin coated; optional: stainless steel CF3M, complies with AISI 316L Tower: CF3M, complies with AISI 316L	
IP degree of protection in accordance with EN 60529	IP 66, IP 67, NEMA 4X	

* Devices with Ethernet-APL communication are supplied with the Smart HMI as standard.

** Only for devices with HART® communication

Model variants

FSS430

Swirl flowmeter for vapor, liquid and gas, with optional graphical display, optional digital output and optional integrated temperature measurement.

FSS450

Swirl flowmeter for vapor, liquid, and gas, with integrated digital output, temperature compensation and flow computer unit functionality.
The device offers the option of directly connecting remote temperature transmitters, pressure transmitters, or gas analyzers.

Measurement principle

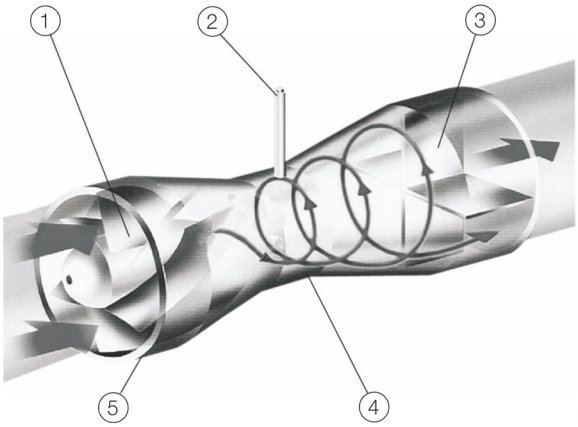

1 Inlet guide body
2 Piezo Sensor
3 Outlet guide body
4 Housing
5 Stagnation point

Figure 2: Measuring principle

The inlet guide body converts the axial flow of the incoming measuring medium into rotational movement. In the center of this rotation a vortex core is formed which is forced into a secondary spiral-shaped rotation by the return flow.

The frequency of this secondary rotation is proportional to the flow and, if the internal geometry of the meter measuring device exhibits an optimum design, will be linear over a wide measuring range.
This frequency is measured by a Piezo sensor. The frequency signal from the flowmeter sensor, which is proportional to the flow, undergoes downstream processing in the transmitter.

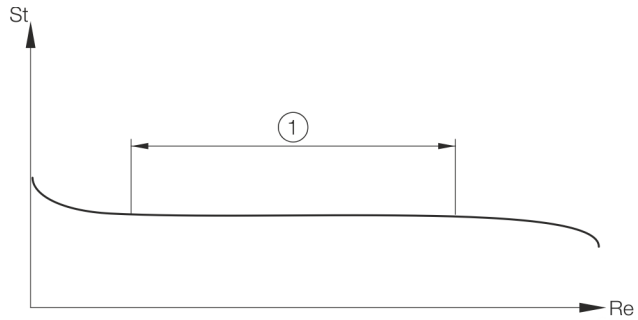

1 Linear flow area

Figure 3: How the Strouhal number is dependent upon the Reynolds number

Due to the dimensions of the inlet guide body and the inner geometry, the Strouhal number (St) is constant over a very wide range of the Reynolds number (Re).

… Overview – models

Available LCD indicator variants

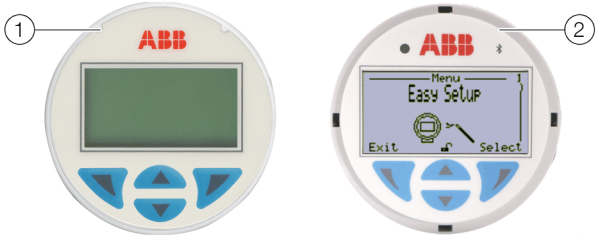

1 Standard LCD indicator and LCD indicator with TTG (Through-The-Glass) keypad technology

2 Smart LCD indicator (Smart HMI)

Figure 4: LCD indicator variants

Order code 'Integrated Digital Display (LCD)'	
L1	LCD indicator
L2	LCD indicator with TTG (Through-The-Glass) keypad technology
LE	Smart LCD indicator

Signal output / Communication	Order Code 'Output Signal'	L1	L2	LE
4 to 20 mA/HART®	H1, H5	X	—	X
Ethernet-APL™	A1	—	—	X
Modbus RTU®	M4	X	X	—
PROFIBUS PA®	P1	X	X	—
FOUNDATION Fieldbus®	F1	X	X	—
Bluetooth®	—	—	—	X

Flowmeter sensor

Nominal diameter selection

The nominal diameter is selected on the basis of the maximum operating flow Qv_{max}. If maximum measuring spans are to be achieved, this figure should not be less than half the maximum flow rate for each nominal diameter ($Qv_{max}DN$), although it is possible to reduce this value to approx. 0.15 $Qv_{max}DN$.
The linear lower range value is dependent on the Reynolds number (see **Measurement value deviation and reproducibility** on page 8).

If the flow to be measured is present as a standard flow (standard condition: 0 °C (32 °F), 1013 bar) or mass flow, it must be converted into an operating flow and, based on the measuring range tables (see **Measuring range table** on page 10), the most suited nominal device diameter must be selected.

Formula elements used	
ρ	Operating densities (kg/m³)
ρ_N	Standard density (kg/m³)
P	operating pressure (bar)
T	operating temperature (°C)
Q_v	Operating flow (m³/h)
Q_n	Standard flow (m³/h)
Q_m	mass flowrate (kg/h)
η	dynamic viscosity (Pas)
ν	Kinematic viscosity (m²/s)

Conversion of standard density to operating density

$$\rho = \rho_n \times \frac{1{,}013 + \rho}{1{,}013} \times \frac{273}{273 + T}$$

Conversion to operating flow

1. From standard flow (Q_n)

$$Q_V = Q_n \frac{\rho_n}{\rho} = Q_n \frac{1{,}013}{1{,}013 + \rho} \times \frac{273 + T}{273}$$

2. From mass flow (Q_m)

$$Q_V = \frac{Q_m}{\rho}$$

Conversion of dynamic viscosity --> kinematic viscosity

$$\nu = \frac{\eta}{\rho}$$

Calculation of Reynolds number

$$\mathrm{Re} = \frac{Q}{(2827 \cdot \nu \cdot d)}$$

Q Flow in m³/h
d Pipe diameter in m
ν kinematic viscosity (m²/s)

The current Reynolds number can also be calculated using the ABB Product Selection Assistant (PSA tool).

Measuring accuracy

Reference conditions

Flow measurement	
Set flow range	0.5 to 1 × $Q_{vmax}DN$
Ambient temperature	20 °C (68 °F) ±2 K
Relative humidity	65 %, ±5 %
Air Pressure	86 to 106 kPa
Power supply	24 V DC
Signal cable length (for remote mount design)	30 m (98 ft)
Current output load	250 Ω (only 4 to 20 mA)
Measuring medium for calibration	Water, approx. 20 °C (68 °F), 2 bar (29 psi)
	Air, 960 mbar abs. ±50 mbar (14 psia ±0.7 psi), 24 °C ±4 °C (75 °F ±7 °F)
Calibration loop internal diameter	corresponds to inside diameter of device
Unobstructed straight inlet section	3 × DN
Outlet section	1 × DN
Pressure measurement	3 × DN to 5 × DN behind the flowmeter
Temperature measurement	2 × DN bis 3 × DN downstream after the pressure measurement

... Flowmeter sensor

... Measuring accuracy

Measurement value deviation and reproducibility

Flow measurement

Measured error in percentage terms from the measured value under reference conditions (including the transmitter) in the linear measuring range limited between R_{emin} and Q_{max} (see **Measuring range table** on page 10).

Measured error (including transmitter) depending on the measuring medium and operating mode	
Fluid	
Operating volume flow	±0,5 %
Standard volume flow	±0,6 %
Mass flow measurement	±0,6 %
Gas	
Operating volume flow	±0,50 %
Standard volume flow*	±0,64 %
Mass flow measurement*	±0,64 %
Steam	
Operating volume flow	±0,50 %
Measurement of overheated steam / saturated steam mass (with internal temperature measurement)	±2,50 %
Measurement of overheated steam / saturated steam mass (with internal temperature measurement and external pressure measurement)*	±0,71 %
Measurement of overheated steam / saturated steam mass (with external temperature and pressure measurement)**	±0,57 %

* When using a pressure transmitter with 0.1 % accuracy

* When using a pressure transmitter with 0.1 % accuracy and a temperature transmitter with PT100 Class A

Measured error for current output	
Additional measured error	< 0,1 %
At zero-point:	< 0,05 % / 10 K

A pipe offset in the inlet section or outlet section can influence the measured error.
Additional measured errors may occur if there are deviations from the reference conditions.

Reproducibility	
DN 15 (½ in)	0,3 %
DN 25 to 150 (1 to 6 in)	0,2 %
DN 200 to 400 (8 to 12 in)	0,2 %

Temperature measurement

Measured value deviation (including transmitter)

±1 °C or 1 % of measured value (in °C), whichever is greater

Reproducibility

≤ 0.2 % of the measured value

Permitted pipe vibration

The values specified for acceleration g are intended as guide values.
The actual limits will depend on the nominal diameter and the measuring range within the entire [measuring span] and the frequency of the pipe vibration. Therefore, the acceleration value g has only limited meaning.

- Maximum acceleration 20 m/s, 2, 0 to 150 Hz.
- Acceleration up to 1 g (10 to 500 Hz) in accordance with IEC 60068-2-6

Ambient conditions

Ambient temperature

In accordance with IEC 60068-2-78

Explosion protection	Ambient temperature range T_{amb}	
	Standard	Advanced mode
No explosion protection	−20 to 85 °C* (−4 to 185 °F)*	−40 to 85 °C* (−40 to 185 °F)*
Ex ia, Ex ec	−20 °C < Ta < xx °C** (−4°F < Ta < xx °F)**	-40 °C < Ta < xx °C** (−40 °F < Ta < xx °F)**
Ex d ia, XP-IS	−20 to 75 °C (−4 to 167 °F)	−40 to 75 °C (−40 to 167 °F)
IS, NI	−20 °C < Ta < xx °C** (−4°F < Ta < xx °F)**	-40 °C < Ta < xx °C** (−40 °F < Ta < xx °F)**

* Remote mount design: max. 80 °C (176 °F) ambient temperature due to the factory-fitted signal cable!

** The temperature xx °C (xx °F) depends on the temperature class T_{class}

Relative humidity

Design	Relative humidity
Standard	Up to 100 % with admissible condensation

Measuring medium temperature range

Design	T_{medium}
Standard	−55 to 280 °C (−67 to 536 °F)
High-temperature version (option)	−55 to 350 °C (−67 to 662 °F)

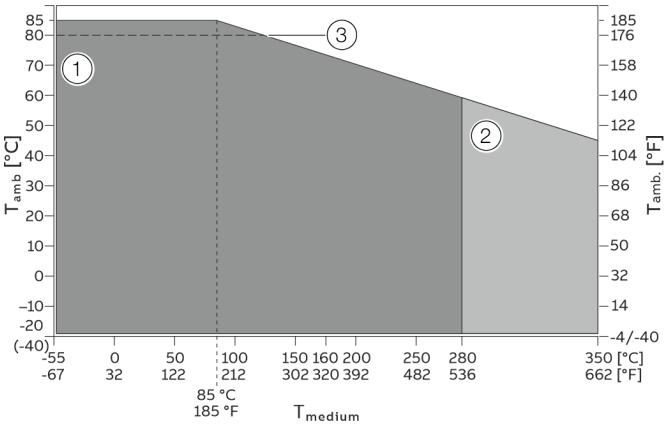

1 Temperature range standard version

2 Temperature range high-temperature version (option)

3 Remote mount design: max. 80 °C (176 °F) ambient temperature due to the factory-fitted signal cable!

Figure 5: Measuring medium temperature T_{medium} dependent on the ambient temperature T_{amb}.

SIL functional safety

Overall safety accuracy

The defined value of the 'overall safety accuracy' of the safety function of the device is ±2 % of the measuring range (±2 % of 16 mA).

Device specific data related to functional safety

Characteristic curve in accordance with IEC 61508	Value	
	Integral mount design	Remote mount design
Type of Assessment	Complete assessment in accordance with IEC 61508	
SIL	2	
Systematic capacity	2	
HFT	0	
Component Type	B	
Measuring mode	Low Demand Mode	
SFF[1]	96.08 %	96.05 %
PFDAvg after 1 year[2]	$1.83E^{-03}$	$1.96E^{-03}$
PFDAvg after 2 years[2] [3]	$3.66E^{-03}$	$3.92E^{-03}$
PFDAvg after 3 years[2]	$5.49E^{-03}$	$5.87E^{-03}$
PFDAvg after 4 years[2]	$7.32E^{-03}$	$7.83E^{-03}$
PFDAvg after 5 years[2]	$9.15E^{-03}$	$9.79E^{-03}$
Λs[1]	$3.167E^{-06}$	$3.209E^{-06}$
Λdd[1]	$4.155E^{-06}$	$4.279E^{-06}$
Λdu[1]	$4.096E^{-07}$	$4.384E^{-07}$

1) Calculated at an ambient temperature of 100 °C in accordance with Siemens SN29500

2) The maintenance cycle time can be adjusted accordingly in the diagnosis menu, e.g. 8760 h for 1 year, 17520 h for 2 years, 26280 h for 3 years, 35040 h for 4 years or 43800 h for 5 years operation time without proof test.

3) Recommended proof test time, default maintenance cycle time.

Note

The ambient temperature range is −40 °C to 85 °C (−40 to 185 F).

... Flowmeter sensor

Measuring range table

Flow measurement for liquids (Water, 1 bar (a) 20 °C)

Nominal diameter	[m³/h]		[Usgpm]		[Hz]	[Hz]
	$Qv_{min}DN$[1)]	$Qv_{max}DN$	$Qv_{min}DN$[1)]	$Qv_{max}DN$	Min. Frequency[2)]	Max. Frequency[2)]
DN 15 (½ in)	0.49	2.5	2.2	11	6	310
DN 20 (¾ in)	0.64	4.0	2.8	17.6	4	200
DN 25 (1 in)	0.79	8.0	3.5	35.2	4	200
DN 32 (1¾ in)	1.00	16.0	4.4	70.4	3	160
DN 40 (1½ in)	1.2	20.0	5.3	88	2.5	120
DN 50 (2 in)	1.4	30.0	6.2	132	2	100
DN 80 (3 in)	2.3	120.0	10	528	2	100
DN 100 (4 in)	5.0	180.0	22	792	2	90
DN 150 (6 in)	8.0	400.0	35	1760	1	50
DN 200 (8 in)	18.0	700.0	79	3080	0.8	40
DN 300 (12 in)	60.0	1600.0	264	7040	0.5	30
DN 400 (16 in)	110.0	2500.0	484	11000	0.4	20

Flow measurement of gases and steam (Air, 1013 mbar (a) 20 °C)

Nominal diameter	[m³/h]		[ft³/min]		[Hz]	[Hz]
	$Qv_{min}DN$[1)]	$Qv_{max}DN$	$Qv_{min}DN$[1)]	$Qv_{max}DN$	Min. Frequency[2)]	Max. Frequency[2)]
DN 15 (½ in)	3.7	20.0	2.2	11.8	52	2440
DN 20 (¾ in)	4.8	44.0	2.8	25.9	52	2150
DN 25 (1 in)	6.0	90.0	3.5	53	52	2200
DN 32 (1¾ in)	8.0	230.0	4.7	135	52	2320
DN 40 (1½ in)	10.7	300.0	6.3	176	40	1830
DN 50 (2 in)	16.8	440.0	10	259	30	1480
DN 80 (3 in)	60.0	1160.0	36	682	20	960
DN 100 (4 in)	48.0	1725.0	28	1015	18	840
DN 150 (6 in)	150.0	3800.0	88	2236	10	510
DN 200 (8 in)	160.0	5800.0	94	3400	10	340
DN 300 (12 in)	420.0	13600.0	250	8000	4	220
DN 400 (16 in)	560.0	21500.0	330	12650	3	180

1) For other media or other operating conditions please refer for a proper sizing to our ABB Product and Selection Assistant PSA tool, www.abb.com/flow-selector.

2) Frequency range for full measuring range coverage. The effectively used frequency range can vary depending on medium conditions and device set-up. The frequency range covered by calibration can be found on the test report supplied with each device.

Process connections

Nominal diameter	Pressure rating
DN 15 to DN 200	Flange in accordance with DIN: PN 10 to 40*
(½ to 8 in)	Flange in accordance with ASME: class 150 / 300*
DN 300 to DN 400	Flange in accordance with DIN: PN 10 to 16*
(12 to 16 in)	Flange according to ASME: class 150*

* Higher pressure ratings up to PN 160 / class 900 on request

Materials

Materials for the sensor

Wetted components	Temperature range
Meter tube / conduit body	
• Stainless steel 1.4571 (AISI 316 Ti) / AISI 316L / CF8C / CF3M • Hastelloy C (optional)	—
Sensor	
• Stainless steel 1.4571 (AISI 316 Ti) • Hastelloy C (optional)	—
Sensor gasket:*	
• PTFE O-ring	−55 to 260 °C (−67 to 500 °F)
• Kalrez 6375 O-ring (optional)	−20 to 275 °C (−4 to 527 °F)
• Graphite (optional for high temperature design)	−55 to 280 °C (−67 to 536 °F)

Chassis	Temperature range
• Stainless steel 1.4571 (AISI 316 Ti) / AISI 316L / CF8 / CF8C / CF3M • Hastelloy C (optional)	−55 to 280 °C (−67 to 536 °F)

* Other designs on request.

Transmitter

Housing	Temperature range $T_{amb.}$
• Die-cast aluminum, copper content < 0.3 % • Stainless steel CF3M, corresponds to AISI 316L (optional) • Tower: CF8 (complies with AISI 304) or CF3M (complies with AISI 316L)	−55 to 85 °C* (−67 to 185 °F)*

* Remote mount design: max. 80 °C (176 °F) ambient temperature due to the factory-fitted signal cable!

Pressure Equipment Directive

Conformity assessment in accordance with Category III, fluid group 1, gas.
Note the corrosion resistance of the meter tube materials in relation to the measuring medium.

CRN approval

Certain device versions and connection options have CRN approval under number ‘CRN 0F1209.xx’.
Please contact ABB for more information.

... Flowmeter sensor

Material load for process connections

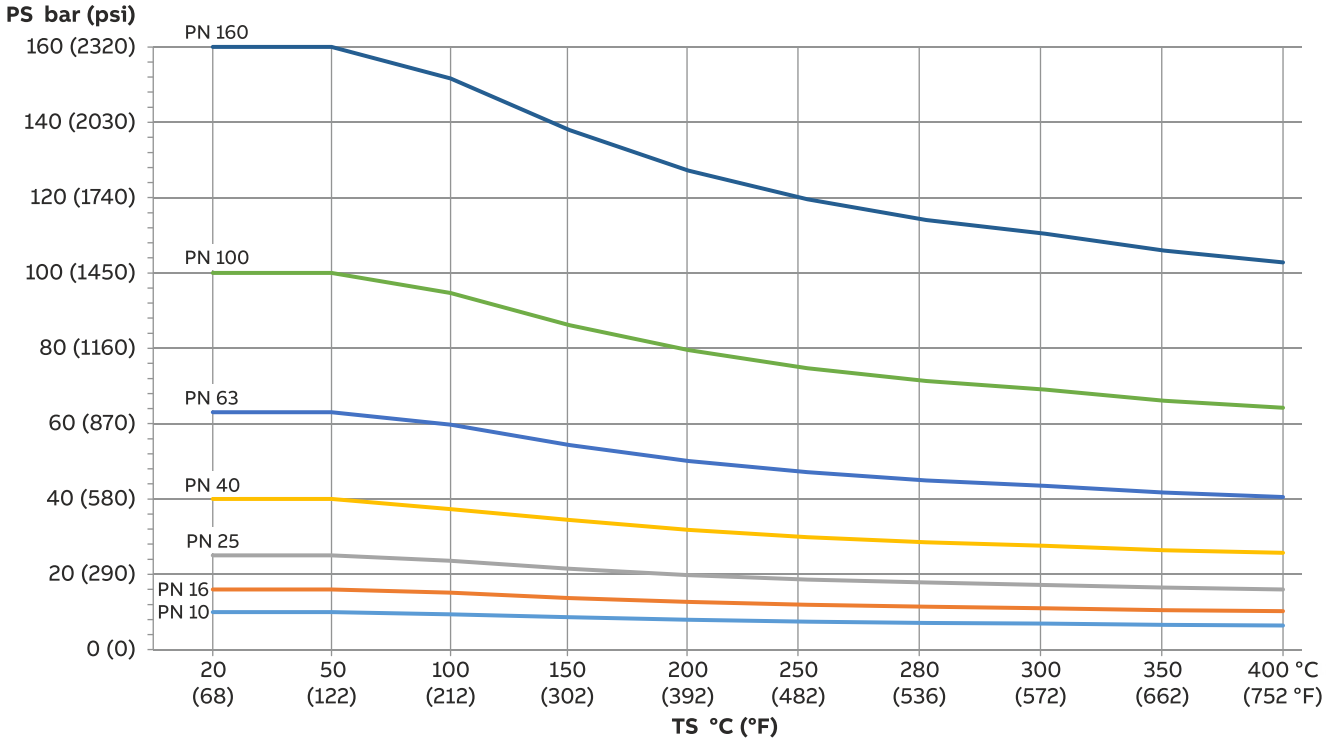

Figure 6: DIN flange process connection

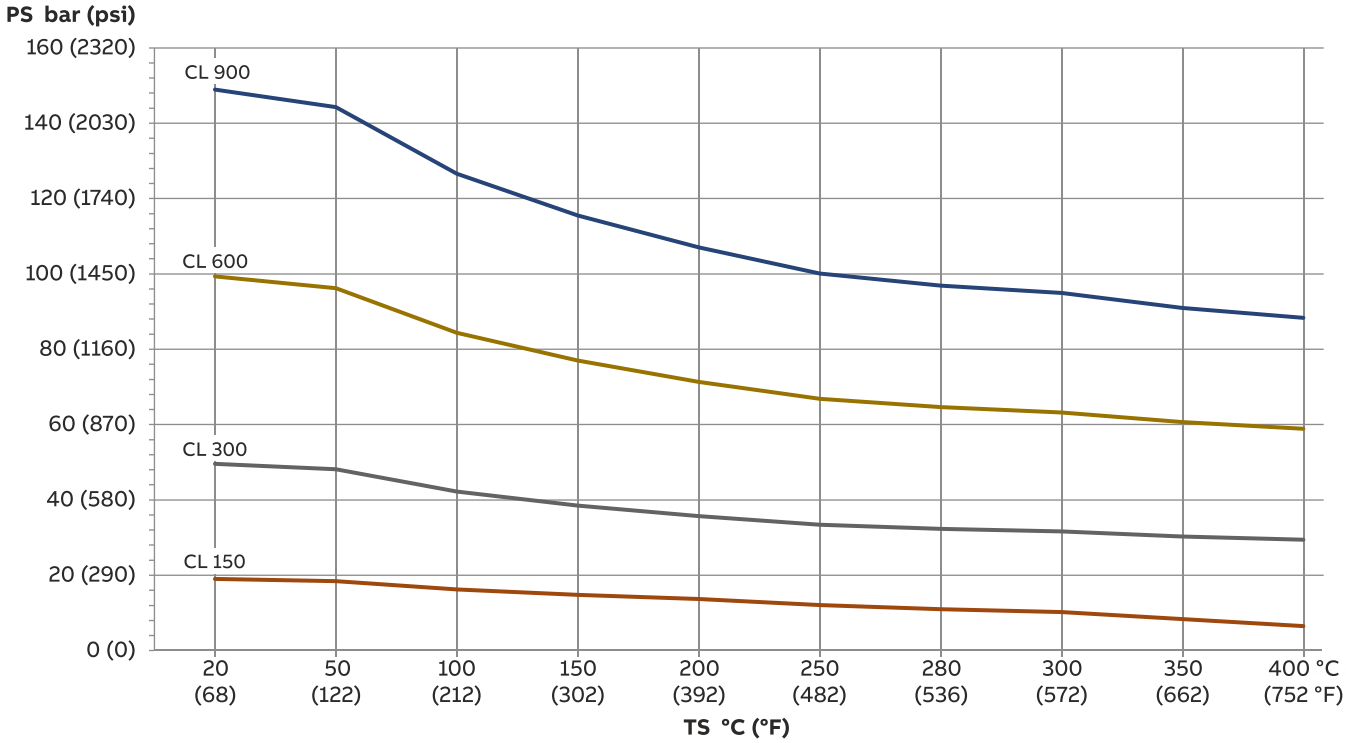

Figure 7: ASME flange process connection

Installation conditions

General

A Vortex or Swirl flowmeter can be installed at any point in the pipeline system. However, the following installation conditions must be considered:

- Compliance with the ambient conditions
- Compliance with the recommended inlet and outlet sections
- The flow direction must correspond to that indicated by the arrow on the sensor
- Compliance with the required minimum interval for removing the transmitter and replacing the sensor
- Avoidance of mechanical vibrations of the piping (by fitting supports if necessary)
- The inside diameter of the sensor and the piping must be identical
- Avoidance of pressure oscillations in long piping systems at zero flow by fitting gates at intervals
- Attenuation of alternating (pulsating) flow by using appropriate damping devices. The residual pulse must not exceed 10 %. The frequency of the conveying equipment must not be within the range of the measuring frequency of the flowmeter.
- Valves / gates should normally be arranged in the flow direction downstream of the flowmeter (typically: 3 × DN). If the medium is conveyed through piston / plunger pumps or compressors (pressures for fluids > 10 bar / 145 psi), it may be subject to hydraulic vibration in the pipeline when the valve is closed. If this does occur, the valve absolutely has to be installed in the flow direction upstream of the flowmeter. Suitable damping devices (e.g. air vessels) might need to be fitted.
- When fluids are measured, the sensor must always be filled with measuring medium and must not run dry.
- When fluids are measured and during damping, there must be no evidence of cavitation.
- The relationship between the measuring medium and the ambient temperature must be taken into consideration (see data sheet).
- At high measuring medium temperatures > 150 °C (> 302 °F), the sensor must be installed so that the transmitter or terminal box is pointing to the side or downward.

Inlet and outlet sections

On account of its operating principle, the swirl flowmeter functions virtually without inlet and outlet sections.
The figures below show the recommended inlet and outlet sections for various installations.

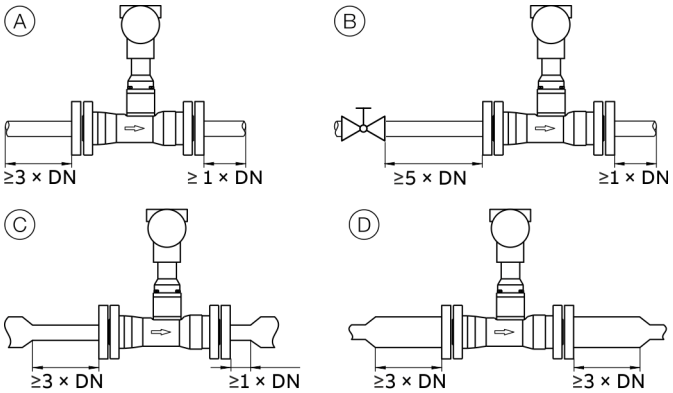

Figure 8: Straight pipe sections

Installation	Inlet section	Outlet section
(A) Straight pipe section	min. 3 × DN	min. 1 × DN
(B) Valve upstream of the meter tube	min. 5 × DN	min. 1 × DN
(C) Pipe reduction	min. 3 × DN	min. 1 × DN
(D) Pipe extension	min. 3 × DN	min. 3 × DN

Additional inlet and outlet sections are not required downstream of reductions with flange transition pieces in accordance with DIN 28545 (α/2 = 8°).

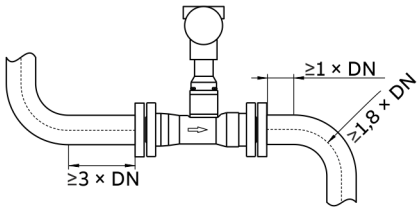

Figure 9: Pipe sections with pipe elbows

Installation	Inlet section	Outlet section
Single pipe elbow upstream or downstream of the meter tube	min. 3 × DN	min. 1 × DN

If the elbow radius of single or double pipe elbows positioned upstream or downstream of the device is greater than 1.8 × DN, inlet and outlet sections are not required.

… Flowmeter sensor

… Installation conditions

Avoiding cavitation

To avoid cavitation, a static overpressure is required downstream of the flowmeter (downstream pressure). This can be estimated using the following formula:

$$p_1 \geq 1{,}3 \times p_2 + 2{,}6 \times \Delta p'$$

ρ_1	Static gauge pressure downstream of the device (mbar)
ρ_2	Steam pressure of fluid at operating temperature (mbar)
$\Delta\rho'$	Pressure drop, measuring medium (mbar)

Installation at high measuring medium temperatures

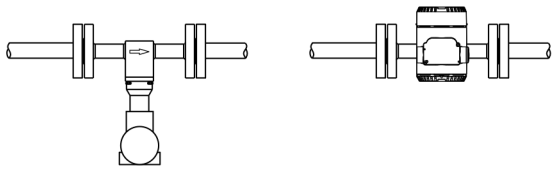

Figure 10: Installation at high measuring medium temperatures

At high measuring medium temperatures > 150 °C (> 302 °F), the sensor must be installed so that the transmitter is pointing to the side or downward.

Installation for external pressure and temperature measurement

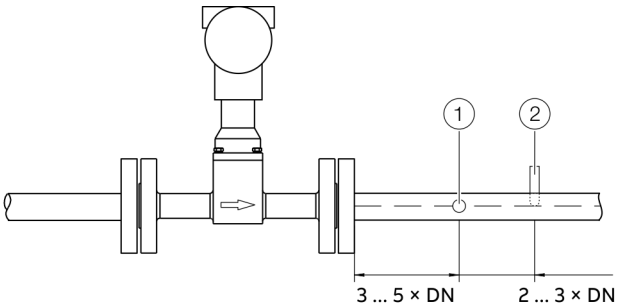

(1) Pressure measuring point (2) Temperature measuring point

Figure 11: Arrangement of the temperature and pressure measuring points

As an option, the flowmeter can be fitted with a Pt100 for direct temperature measurement. This temperature measurement enables, for example, the monitoring of the measuring medium temperature or the direct measurement of saturated steam in mass flow units.
If pressure and temperature are to be compensated externally (e.g. using the flow computer unit), the measuring points must be installed as illustrated.

Installation of setting equipment

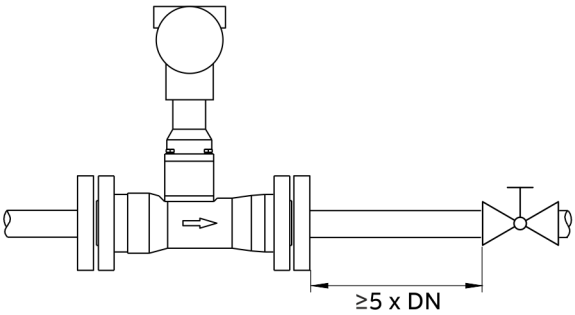

Figure 12: Installation of setting devices

Control and setting devices should be arranged in the forward flow direction **downstream** from the flowmeter at a distance of at least 5 × DN.
If the measuring medium is conveyed through piston pumps / plunger pumps or compressors (pressures for fluids > 10 bar [> 145 psi]), it may be subject to hydraulic vibration in the piping when the valve is closed.
If this case, it is essential that the valve be installed in the forward flow direction **upstream** from the flowmeter.
Suitable dampers (for example, air vessels in the case of pumping using a compressor) might need to be used.

The **SwirlMaster FSS400** is particularly well suited for such arrangements.

Flowmeter sensor insulation recommendation

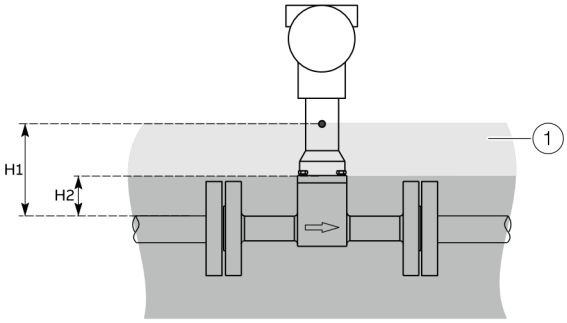

(1) Insulation

H1 Maximum insulation thickness at T_{medium} ≤ 150 °C (302 °F)

H2 Maximum insulation thickness at T_{medium} ≤ 250 °C (482 °F)

Figure 13: Insulation of the meter tube

NOTICE

Overheating of the transmitter

Insulating above the sensor neck can lead to overheating of the transmitter or ingress of moisture into the transmitter.

- Even with correct insulation, overheating of the transmitter can occur if the ambient temperature at the installation location of the transmitter in combination with a high medium temperature creates extreme conditions.
- The operator must observe the ambient conditions and ensure that measures are taken to avoid overheating of the transmitter components. The actual electronic temperature can be observed in the 'Diagnostics Menue' in the device and must not exceed 85 °C (185 °F).

Use of heat tracing

Trace heating may be used under the following conditions:

- If it is installed directly on or around the piping
- If, in the case of existing pipeline insulation, it is installed inside the insulation (the maximum thickness shown in **Figure 13** must not be exceeded).
- If the maximum temperature the heat tracing is able to produce is less than or equal to the maximum medium temperature.

Note

Installation requirements in accordance with EN 60079-14 must be observed.

Please note that the use of trace heaters will not impair EMC protection or generate additional vibrations.

... Flowmeter sensor

Dimensions

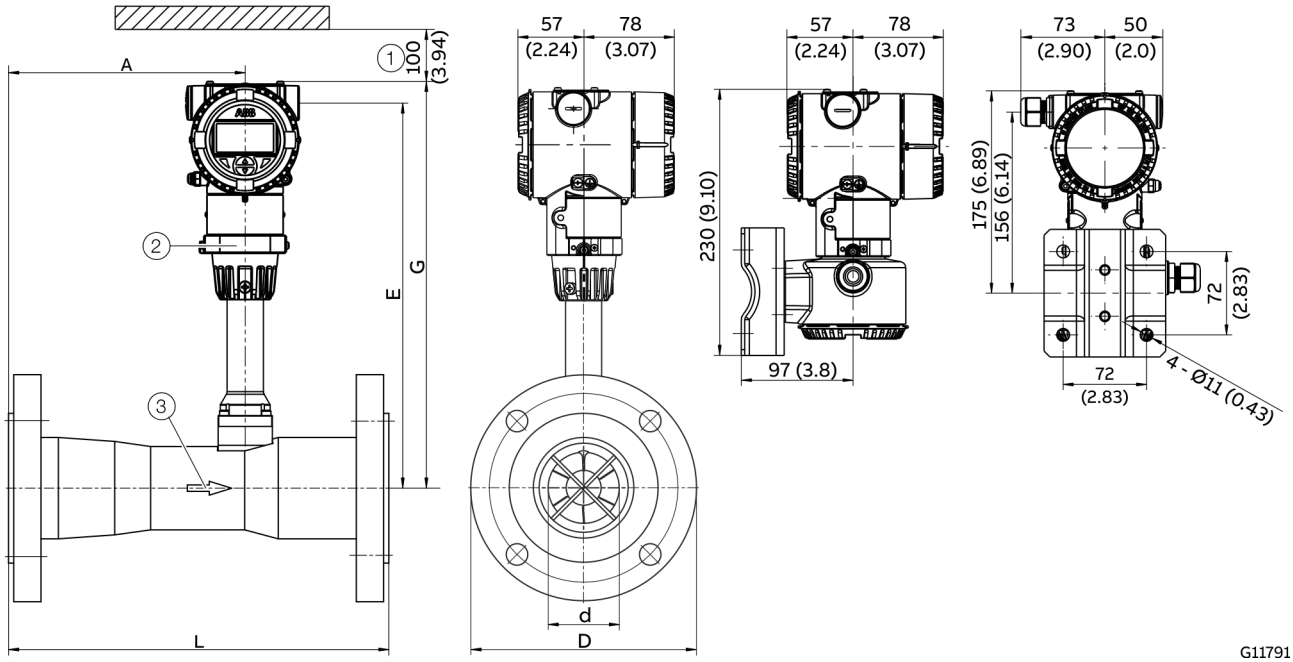

1. Required minimum distance for removing the transmitter and disassembling the sensor unit
2. Can be rotated up to 360°
3. Flow direction

Figure 14: Dimensions in mm (in)

Dimensions for sensors with DIN flanges

Nominal diameter	Pressure rating	L	G	E	A	D	d	Weight [kg (lb)]
DN 15	PN 10 to PN 40	200 (7.87)	346 (13.62)	327 (12.87)	83 (3.27)	95 (3.74)	17.3 (0.68)	5.8 (12.8)
DN 20	PN 10 to PN 40	200 (7.87)	349 (13.74)	330 (12.99)	68 (2.68)	105 (4.13)	22.6 (0.89)	2.4 (5.3)
DN 25	PN 10 to PN 40	150 (5.91)	348 (13.70)	329 (12.95)	67 (2.64)	115 (4.53)	28.1 (1.11)	3.5 (7.7)
DN 32	PN 10 to PN 40	150 (5.91)	346 (13.62)	327 (12.87)	68 (2.68)	140 (5.51)	37.1 (1.46)	4.7 (10.4)
DN 40	PN 10 to PN 40	200 (7.87)	350 (13.78)	331 (13.03)	79 (3.11)	150 (5.91)	42.1 (1.66)	8 (17.6)
DN 50	PN 10 to PN 40	200 (7.87)	353 (13.89)	334 (13.15)	106 (4.17)	165 (6.50)	51.1 (2.01)	7.2 (15.9)
DN 80	PN 10 to PN 40	300 (11.81)	356 (14.01)	337 (13.26)	159 (6.26)	200 (7.87)	82.6 (3.25)	12.2 (26.9)
DN 100	PN 10 to PN 16	350 (13.78)	360 (14.17)	341 (13.42)	189 (7.44)	220 (8.66)	101.1 (3.98)	14.2 (31.3)
	PN 25 to PN 40	350 (13.78)				235 (9.25)	101 (3.98)	18 (39.7)
DN 150	PN 10 to PN 16	480 (18.90)	384 (15.12)	365 (14.37)	328 (12.91)	285 (11.22)	150.1 (5.91)	28.5 (62.8)
	PN 25 to PN 40	480 (18.90)	384 (15.12)	365 (14.37)	328 (12.91)	300 (11.81)	150.1 (5.91)	34.5 (76.1)
DN 200	PN 10 / PN 16	600 (23.62)	404 (15.90)	385 (15.15)	436 (17.17)	340 (13.39)	203.1 (8.00)	50 (110.2)
	PN 25 / PN 40	600 (23.62)	404 (15.90)	385 (15.15)	436 (17.17)	360 / 375 (14.17 / 14.76)	203.1 (8.00)	59 / 66 (130.1 / 145.5)
DN 300	PN 10 / PN 16	1000 (39.37)	450 (17.71)	431 (16.97)	662 (26.06)	445 /460 (17.52 / 18.11)	309.7 (12.19)	171 /186 (377.0 / 410.1)
DN 400	PN 10 / PN 16	1274 (50.16)	486 (19.13)	467 (18.38)	841 (33.11)	565 /580 (22.24 / 22.83)	390.4 (15.37)	245 /266 (540.1 / 586.4)

Tolerance for dimension L: DN 15 to 200 +0 / −3 mm (+0 / −0.12 in), DN 300 to 400 +0 / −5 mm (+0 / −0.20 in)

Dimensions for sensors with ASME flanges

Nominal diameter	Pressure rating	L	G	E	A	D	d	Weight [kg (lb)]
½"	CL 150	200 (7.87)	346 (13.62)	327 (12.87)	83 (3.27)	88.9 (3.5)	15.8 (0.62)	5.3 (11.7)
	CL 300	200 (7.87)	346 (13.62)	327 (12.87)	83 (3.27)	95.2 (3.75)	15.8 (0.62)	5.8 (12.8)
¾"	CL 150	220 (8.66)	349 (13.74)	330 (12.99)	68 (2.68)	98.4 (3.87)	22.6 (0.89)	2.1 (4.6)
	CL 300	230 (9.06)	349 (13.74)	330 (12.99)	68 (2.68)	117.5 (4.63)	22.6 (0.89)	3.0 (6.6)
1 in.	CL 150	150 (5.91)	348 (13.70)	329 (12.95)	67 (2.64)	108 (4.25)	28.1 (1.1)	3.4 (7.5)
	CL 300	150 (5.91)	348 (13.70)	329 (12.95)	67 (2.64)	124 (4.88)	28.1 (1.1)	3.6 (7.9)
1 ¼"	CL 150	150 (5.91)	346 (13.62)	327 (12.87)	68 (2.68)	118 (4.65)	37.1 (1.46)	3.7 (8.2)
	CL 300	150 (5.91)	346 (13.62)	327 (12.87)	68 (2.68)	133 (5.24)	37.1 (1.46)	5.4 (11.9)
1 ½"	CL 150	200 (7.87)	350 (13.78)	331 (13.03)	79 (3.11)	127 (5)	42.1 (1.66)	6.8 (15)
	CL 300	200 (7.87)	350 (13.78)	331 (13.03)	79 (3.11)	155.6 (6.13)	42.1 (1.66)	8.9 (19.6)
2 in.	CL 150	200 (7.87)	353 (13.89)	334 (13.15)	106 (4.17)	152.4 (6)	51.1 (2.01)	7.1 (15.7)
	CL 300	200 (7.87)	353 (13.89)	334 (13.15)	106 (4.17)	165 (6.5)	51.1 (2.01)	9.8 (21.61)
3 in.	CL 150	300 (11.81)	356 (14.01)	337 (13.26)	159 (6.26)	190.5 (7.5)	82.6 (3.25)	11.7 (25.8)
	CL 300	300 (11.81)	356 (14.01)	337 (13.26)	159 (6.26)	209.5 (8.25)	82.6 (3.25)	16.2 (35.7)
4 in.	CL 150	350 (13.78)	360 (14.17)	341 (13.26)	189 (7.44)	228.6 (9)	101.1 (3.98)	18.0 (39.7)
	CL 300	350 (13.78)	360 (14.17)	341 (13.26)	189 (7.44)	254 (10)	101.1 (3.98)	27.5 (60.6)
6 in.	CL 150	480 (18.9)	384 (15.12)	365 (14.37)	328 (12.9)	279.4 (11)	150.1 (5.91)	30.0 (66.1)
	CL 300	480 (18.9)	384 (15.12)	365 (14.37)	328 (12.9)	317.5 (12.5)	150.1 (5.91)	46.0 (101.4)
8 in.	CL 150	600 (23.62)	404 (15.90)	385 (15.15)	436 (17.17)	343 (13.5)	203.1 (8)	45.0 (99.2)
	CL 300	600 (23.62)	404 (15.90)	385 (15.15)	436 (17.17)	381 (15)	203.1 (8)	75 (165.4)
12 in.	CL 150	1000 (39.37)	450 (17.71)	431 (16.97)	662 (26.1)	482.6 (19)	309.7 (12.19)	182 (401.2)
16 in.	CL 150	1274 (50.16)	486 (19.13)	467 (18.38)	841 (33.1)	596.9 (23.5)	390.4 (15.37)	260 (573.2)

Tolerance for dimension L: ½ to 8 in +0 / −3 mm (+0 / −0.12 in), 12 to 16 in +0 / −5 mm (+0 / −0.20 in.)

Transmitter

LCD indicator (option)

- High-contrast LCD indicator, optionally with backlight (Ordercode **'LE'**).
- Display of up to 3 measuring values at the same time, e.g. the actual flow rate, the totalizer value and the temperature, freely configurable.
- Application-specific visualizations which the user can select. Four operator pages can be configured to display multiple values in parallel.
- Plain text fault diagnostics
- Menu-guided parameterization with four buttons.
- Easy Set-up function for fast commissioning.
- Parameterization of the device through the front glass with the housing closed (optional).
- During ongoing operation, the LCD indicator can be connected or disconnected and therefore also used as a configuration tool for other devices.

Remote mount design

In remote mount design, the sensor and transmitter are connected by a signal cable up to 30 m (98 ft) long.
The signal cable is permanently connected to the transmitter and can be made shorter if required.

Operating modes

The following operating modes can be selected depending on the design.

Measured medium	FSx430	FSx450
Fluids	Liquid Volume, Liquid Mass	Liquid Volume, Liquid Mass
Gases	Gas Act. Volume, Gas Std/Norm Vol., Gas Mass	Gas Act. Volume, Gas Std/Norm Vol., Gas Mass
Steam	Steam Act. Volume, Steam/Water Mass	Steam Act. Volume, Steam/Water Mass, Steam/Water Energy

IP rating

- IP 66 / IP 67 in accordance with EN 60529
- NEMA 4x
- 'Dual seal device' in accordance with ANSI/ISA 12.27.01 (only for devices with explosion-proof design with 'Ex d ia' or 'XP-IS' type of protection).

Response time

200 ms (1 tau) or 3/f in seconds
(with deactivated damping, the respective greater value shall apply).

The response time depends on the respective vortex frequency f. Low flow rates can result in higher response times.

Example
Vortex frequency f:
2.4 Hz (nominal diameter DN 300, approx. 10 % flow)
Response time:
3/2.4 Hz = 1.25 seconds

Electromagnetic compatibility

Electromagnetic compatibility of equipment for process and lab control technology 5/93 and EMC Directive 2004/108/EC (EN 61326-1).
Devices with HART communication are optionally available with EMC protection in accordance with NAMUR NE 21.

EMC / HF effect on the current output*
Tested per EN 61326.
Output error of less than ±0.025 % of the measuring range for twisted pair cables in the range:

- 80 to 1000 MHz for radiated field strength of 10 V/m;
- 1.4 to 2.0 GHz for radiated field strength of 3 V/m;
- 2.0 to 2.7 GHz for radiated field strength of 1 V/m.

Magnetic field disruptions in the current output*
Tested per EN 61326.
Output error of less than ±0.025% of the measuring range at 30 A/m (eff.).

* Only for devices with HART communication

FCC / ISED certification

FCC statement

This device complies with part 15 of the FCC Rules. Operation is subject to the following two conditions:

1. This device may not cause harmful interference, and
2. this device must accept any interference received, including interference that may cause undesired operation.

This equipment has been tested and found to comply with the limits for a Class B digital device, pursuant to part 15 of the FCC Rules. These limits are designed to provide reasonable protection against harmful interference in a residential installation.

This equipment generates, uses and can radiate radio frequency energy and, if not installed and used in accordance with the instructions, may cause harmful interference to radio communications. However, there is no guarantee that interference will not occur in a particular installation.

If this equipment does cause harmful interference to radio or television reception, which can be determined by turning the equipment off and on, the user is encouraged to try to correct the interference by one or more of the following measures:

- Reorient or relocate the receiving antenna.
- Increase the separation between the equipment and receiver.
- Connect the equipment into an outlet on a circuit different from that to which the receiver is connected.
- Consult the dealer or an experienced radio/TV technician for help.

NOTICE

Changes or modifications to this unit not expressly approved by the party responsible for compliance could void the user's authority to operate the equipment.

ISED (Canada) regulatory information

This device contains licence-exempt transmitter(s)/receiver(s) that comply with Innovation, Science and Economic Development Canada's licence-exempt RSS(s).

Operation is subject to the following two conditions:

1. This device may not cause interference.
2. This device must accept any interference, including interference that may cause undesired operation of the device.

L'émetteur/récepteur exempt de licence contenu dans le présent appareil est conforme aux CNR d'Innovation, Sciences et Développement économique Canada applicables aux appareils radio exempts de licence.

L'exploitation est autorisée aux deux conditions suivantes:

1. L'appareil ne doit pas produire de brouillage;
2. L'appareil doit accepter tout brouillage radioélectrique subi, même si le brouillage est susceptible d'en compromettre le fonctionnement.

Electrical connections

Signal cables

For devices with a remote mount design, the transmitter and sensor are connected using a signal cable.

The signal cable used must meet at least the following technical specification.

Cable specification	
Impedance	70 to 120 Ω
Withstand voltage	500 V
Outer diameter	6 to 12 mm (0.24 to 0.47 in)
Cable design	3×2×0.75 mm^2, twisted pair
Conductor cross-section	0.75 mm^2
Shield	Copper braid with approximately 85 % coverage
Temperature range	Application-dependent, for use in potentially explosive atmospheres, observe the information in **Temperature resistance for the connecting cable** on page 35!
Maximum signal cable length	30 m (98 ft)

Recommended cables

It is recommended to use an ABB signal cable for standard applications.

The ABB signal cable fulfills the above-mentioned cable specification and can be utilized unrestrictedly up to an ambient temperature of $T_{amb.}$ = 80 °C (176 °F).

ABB signal cable	**Ordering number**
5 m (16 ft), standard scope of delivery	3KXF065068U0200
10 m (33 ft)	3KXF065068U0300
20 m (65 ft)	3KXF065068U0400
30 m (98 ft)	3KXF065068U0500

Digital output – Electrical data

Not active in devices with FOUNDATION Fieldbus® communication!

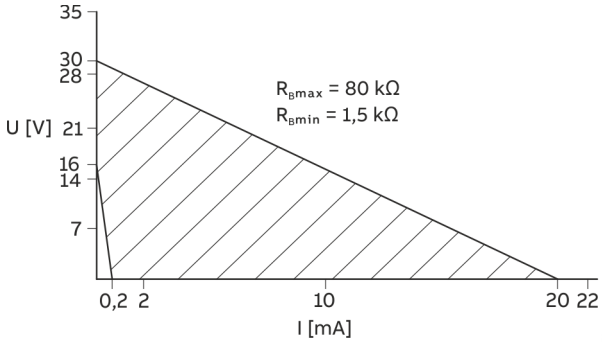

Figure 15: Range of the external supply voltage and current

Digital output	
Operating voltage	16 to 30 V DC
Output current	maximum 20 mA
External resistance R_B	1.5 kΩ ≤ R_B ≤ 80 kΩ
Output 'closed'	0 V ≤ U_{low} ≤ 2 V 2 mA ≤I_{low} ≤ 20 mA
Output 'open'	16 V ≤ U_{high} ≤ 30 V 0 mA ≤I_{high} ≤ 0.2 mA
Pulse output	f_{max}: 10 kHz Pulse width: 0.05 to 2000 ms
Frequency output	f_{max}: 10.5 kHz
Output functions (configurable)	Frequency output Pulse output Binary output (in / out, e.g. alarm signal)

Devices with HART® communication

Note

The HART® protocol is an unsecured protocol (in terms of IT and cyber security), as such the intended application should be assessed to ensure that this protocol is suitable before implementation.

Current output / HART output

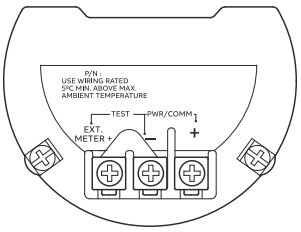

Figure 16: Terminals FSx430 (without binary output)

Terminal	Function / comment
PWR/COMM +	Power supply, current
PWR/COMM –	output- / HART output
EXT. METER	Not assigned

Current output / HART output, digital output and analog input

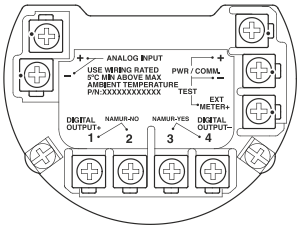

Figure 17: Terminals FSx450 or FSx430 with binary output

Terminal	Function / comment
PWR/COMM +	Power supply, current output / HART output
PWR/COMM –	
EXT. METER +	Current output 4 to 20 mA for external display
DIGITAL OUTPUT 1+	Digital output, positive pole
DIGITAL OUTPUT 2	Bridge after terminal 1+, NAMUR output deactivated
DIGITAL OUTPUT 3	Bridge after terminal 4-, NAMUR output activated
DIGITAL OUTPUT 4–	Digital output, negative pole
ANALOG INPUT +	Analog input 4 to 20 mA for remote transmitter,
ANALOG INPUT –	e.g. for temperature, pressure, etc.

Power supply

Devices with HART® communication	
Terminals	PWR/COMM + / PWR/COMM –
Supply voltage	12 to 42 V DC
	13.6 to 42 V DC
	(With Surge protection – order code **S1**)
	14.2 to 42 V DC
	(With SIL and/or enhanced EMC protection – order code **G4**)
Residual ripple	Maximum 5 % or U_{SS} = ±1.5 V
Power consumption	< 1 W

U_{SS} Peak-to-peak value of voltage

Digital output

For electric data of the digital output, see **Digital output – Electrical data** on page 20.

… Electrical connections

… Devices with HART® communication

Current output / HART output

Only for devices with HART communication.

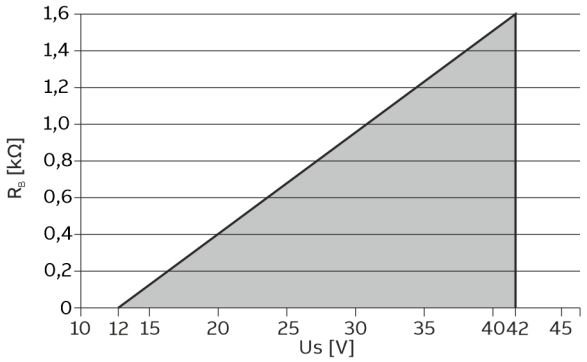

Figure 18: Load diagram of current output; load depending on supply voltage

Devices with HART® communication	
Terminals	PWR/COMM + / PWR/COMM –
Minimal Load R_B	250 Ω
The load R_B is calculated as a function of the available supply voltage U_S and the selected signal current I_B as follows:	
$R_B = U_S / I_B$	
R_B Load resistance	
U_S Supply voltage	
I_B Signalstrom	

Low flow cut-off

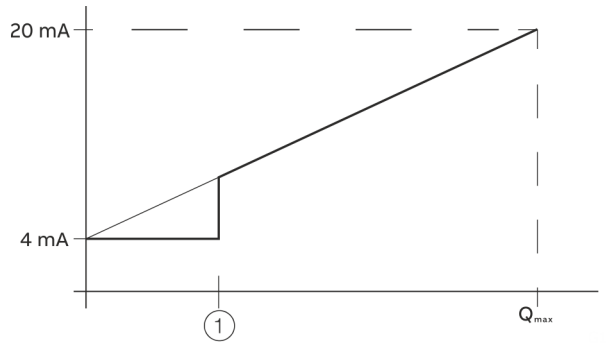

(1) Low flow

Figure 19: Behavior of the current output

The current output behaves as shown in the figure.
Above the low flow, the current curve proceeds as a straight line in accordance with the flow rate.

- Flow rate = 0, current output = 4 mA
- Flow rate = Q_{max}, current output = 20 mA

If the low flow cut-off is activated, flow rates below the low flow are set to 0 and the current output set to 4 mA.

Analog input 4 to 20 mA

Only for devices with HART® communication.

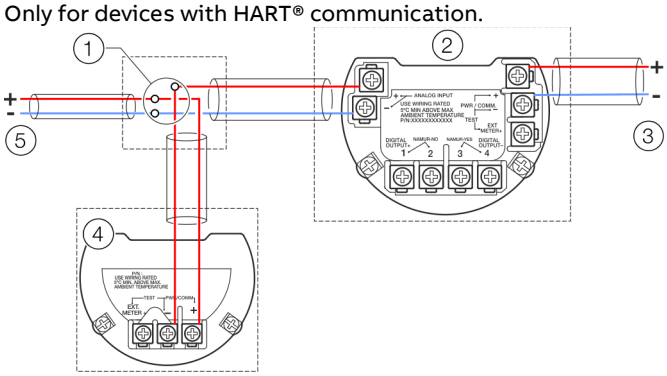

(1) Terminal points in separate cable junction box
(2) SwirlMaster FSS430, FSS450
(3) Power supply SwirlMaster FSS430, FSS450
(4) Remote transmitter
(5) Power supply for the remote transmitter

Figure 20: Connection of transmitters to analog input (example)

Analog input 4 to 20 mA	
Terminals	ANALOG INPUT+ / ANALOG INPUT–
Operating voltage	16 to 30 V DC
Input current	3.8 to 20.5 mA
Equivalent resistance	90 Ω

A remote transmitter with current output from 4 to 20 mA can be connected to the analog input:

- Pressure transmitter e.g. ABB model 261 / 266
- Temperature transmitter
- Gas analyzer for the net methane content of biogas
- Density meter or mass meter for a density signal

The analog input can be configured using the relevant software:

- Input for the pressure measurement for pressure compensation for the flow measurement of gases and vapor.
- Input for the return temperature measurement for energy measurement.
- Input for the net methane content of biogas.
- Input for density measurement for the calculation of the mass flow.

HART® communication with remote transmitter

Only for devices with HART® communication.

FSx430 connection with output option H1

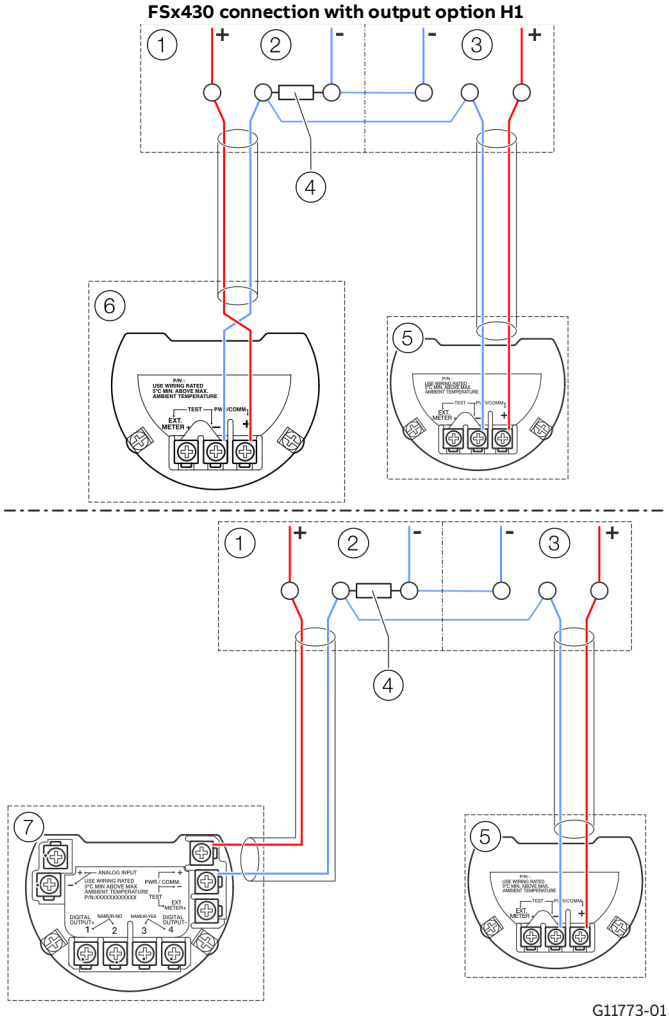

FSx450 or FSx430 connection with output option H5

1. Control cabinet
2. Power supply
3. Power supply for the remote transmitter
4. Load resistance
5. External pressure transmitter
6. FSx430 connection with output option H1
7. FSx450 or FSx430 connection with output option H5

Figure 21: Connection of transmitters with HART communication (example)

A remote pressure transmitter with HART communication can be connected through the current output / HART output (4 to 20 mA). Here, the remote transmitter must be operated in HART Burst mode, e.g. the ABB pressure transmitter model 266 or model 261 with the 'P6 – HART Burst Mode' ordering option.

The SwirlMaster FSS430, FSS450 transmitter supports HART communication up to the HART7 protocol.

Note

The VortexMaster / SwirlMaster cannot communicate with a control system or configuration tool via HART while the pressure transmitter is communicating in BURST mode, because the BURST signal has priority over cyclical HART communication.

... Electrical connections

... Devices with HART® communication

HART® communication connection example

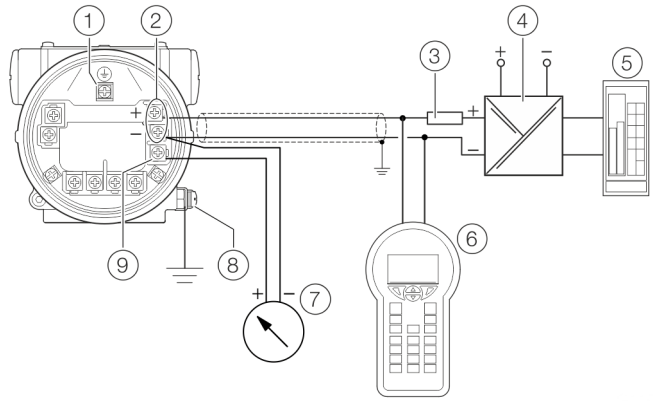

1. Internal ground terminal
2. Power supply, current output / HART output
3. Load resistance
4. Power supply / Supply isolator
5. PLC / DCS
6. HART Handheld Terminal
7. External indicator
8. External ground terminal
9. Terminal for external indicator

Figure 22: HART communication (example)

For connecting the signal voltage / supply voltage, twisted cables with a conductor cross-section of 18 to 22 AWG / 0.8 to 0.35 mm^2 and a maximum length of 1500 m (4921 ft) must be used. For longer leads a greater cable cross section is required.
For shielded cables the cable shielding must only be placed on one side (not on both sides).
For the earthing on the transmitter, the inner terminal with the corresponding marking can also be used.
The output signal (4 to 20 mA) and the power supply are conducted via the same conductor pair.
The transmitter works with a supply voltage between 12 and 42 V DC. For devices with the type of protection 'Ex ia, intrinsic safety' (FM, CSA, and SAA approval), the supply voltage must not exceed 30 V DC. In some countries the maximum supply voltage is limited to lower values. The permissible supply voltage is specified on the name plate on the top of the transmitter.

NOTICE

Any configuration changes are saved in sensor memory only if no HART communication is taking place.

- To securely save any changes, make sure that HART communication has ended before the device is disconnected from power.

The possible lead length depends on the total capacity and the total resistance and can be estimated based on the following formula.

$$L = \frac{65 \times 106}{R \times C} - \frac{Ci + 10000}{C}$$

L	Lead length is meters
R	Total resistance in Ω
C	Lead capacity
C_i	Maximum internal capacity in pF of the HART field devices in the circuit

Avoid installing the cable together with other power leads (with inductive load, etc.), as well as the vicinity to large electrical installations.
The HART Handheld terminal can be connected to any connection point in the circuit if a resistance of at least 250 Ω is present in the circuit. If there is resistance of less than 250 Ω, an additional resistor must be provided to enable communication. The handheld terminal is connected between the resistor and transmitter, not between the resistor and the power supply.

Factory settings of HART® Variables PV, SV, TV and QV depending on the operating mode

The following table shows the factory default assignment of process variables to the HART variables (PV, SV, TV or Qv) depending on operating mode.

Operating mode	HART variables			
	PV	**SV**	**TV**	**QV**
Liquid Volume	Operating volumes	Temperature	Totalizer volumes	–
Liquid Mass	Mass	Temperature	Totalizer mass	Operating volumes
Gas Act. Volume	Operating volumes	Temperature	Totalizer volumes	–
Gas Std/Norm Vol.	Standard volume	Temperature	Standard volume counter	Operating volumes
Gas Mass	Mass	Temperature	Totalizer mass	Operating volumes
Steam Act. Volume	Operating volumes	Temperature	Totalizer volumes	–
Steam/Water Mass	Mass	Temperature	Totalizer mass	Operating volumes
Steam/Water Energy	Energy	Temperature	Energy counter	Mass

Possible selection of HART® Variables depending on the respective operating mode

The following table shows the possible process variables which can be assigned to the HART variables (PV, SV, TV or Qv) depending on the operating mode. The process variables can be assigned to the HART variables via the Device Type Manager or the EDD / FDI package in the Field Information Manager (FIM).

Operating mode	PV	Additional dynamic HART variables which can be selected							
Liquid Volume	Operating volumes	Temperature	Totalizer volumes	–	–	–	–	–	–
Liquid Mass	Mass	Temperature	Totalizer mass	Operating volumes	Totalizer volumes	–	–	–	–
Gas Act. Volume	Operating volumes	Temperature	Totalizer volumes	–	–	–	–	–	–
Gas Std/Norm Vol.	Standard volume	Temperature	Standard volume counter	Operating volumes	Totalizer volumes	–	–	–	–
Gas Mass	Mass	Temperature	Totalizer mass	Operating volumes	Totalizer volumes	–	–	–	–
Steam Act. Volume	Operating volumes	Temperature	Totalizer volumes	–	–	–	–	–	–
Steam/Water Mass	Mass	Temperature	Totalizer mass	Operating volumes	Totalizer volumes	–	–	–	–
Steam/Water Energy	Energy	Temperature	Energy counter	Operating volumes	Totalizer volumes	Mass	Totalizer mass	–	–

… Electrical connections

Devices with Ethernet APL™ communication

Note
The Ethernet-APL™ protocol is an unsecured protocol (in terms of IT or cyber security), as such the intended application should be assessed to ensure that this protocol is suitable before implementation.

Note
For detailed information on the Ethernet-APL™ interface, please refer to the separate interface description ‘COM/FSS400/FSV400/ETHERNET-APL’.

Terminal layout

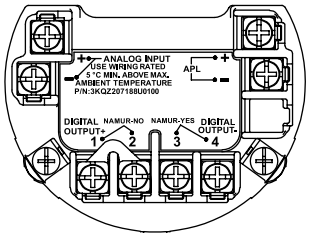

Figure 23: Terminals

Terminal	Function / comment
APL+	Power supply, Ethernet-APL interface
APL–	
DIGITAL OUTPUT 1+	Digital output, positive pole
DIGITAL OUTPUT 2	Bridge after terminal 1+, NAMUR output deactivated
DIGITAL OUTPUT 3	Bridge after terminal 4–, NAMUR output activated
DIGITAL OUTPUT 4–	Digital output, negative pole
ANALOG INPUT +	**FSS450, FSV450 only!**
ANALOG INPUT –	Analog input 4 to 20 mA for remote transmitter, e.g. for temperature, pressure, etc.

Power supply

Connection values of APL field switch

Devices with Ethernet APL communication	
Terminals	APL + / APL –
Supply voltage	9 to 15 V DC
Power consumption	0.54 W

Digital output

For electric data of the digital output, see **Digital output – Electrical data** on page 20.

Ethernet-APL™ network topology

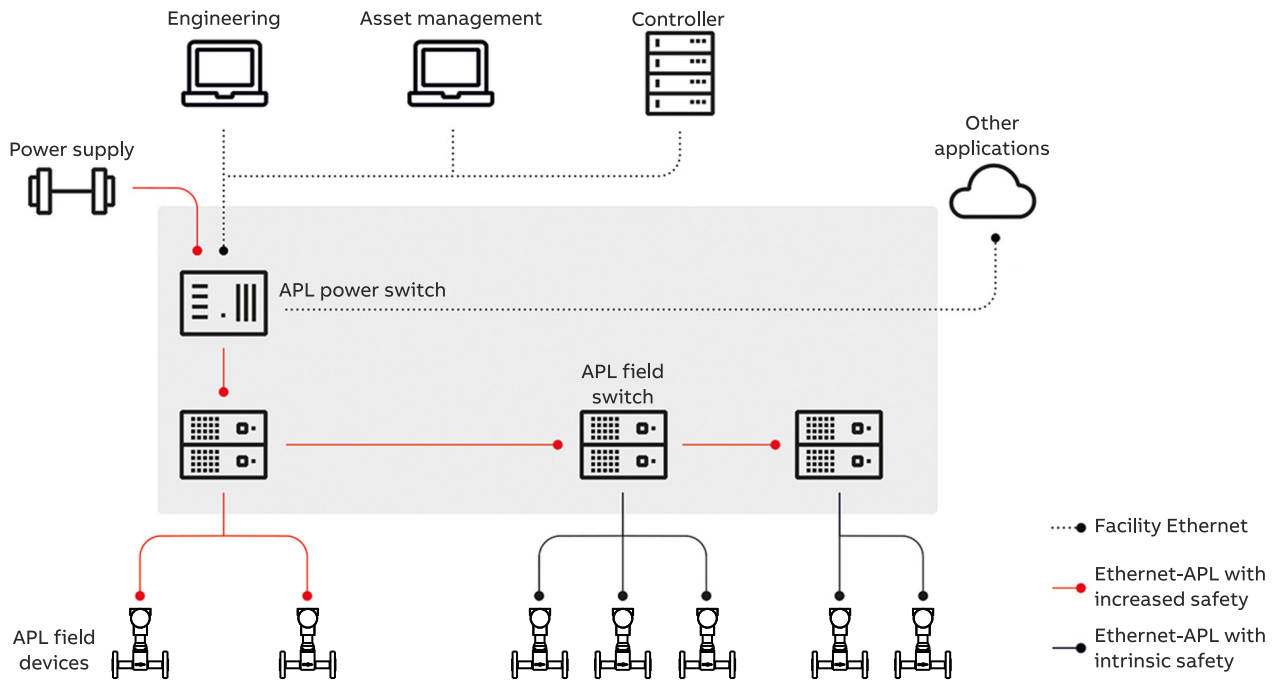

Figure 24: Exemplary Ethernet-APL topology

Ethernet-APL is designed to support various installation topologies, with optional redundancy or resiliency concepts and trunk-and-spur.

The trunk provides high power and signal levels for long cable lengths, up to 1000 m (3281 ft).

Whereas, the spur carries lower power with optional intrinsic safety for lengths up to 200 m (656 ft).

Ethernet-APL explicitly specifies point-to-point connections only with each connection between communications partners constituting a segment. Ethernet-APL switches thus isolate communications between segments.

The Ethernet-APL field switch/device used must be certified for use in the intended hazardous area location.

More network topology used in areas with explosive atmosphere please refer to 'Ethernet-APL Engineering Guideline'. See www.ethernet-apl.org for more information.

Note
The SwirlMaster FSS430, FSS450 only support star network topology. Ring and daisy chain network configurations are currently not supported.

Ethernet-APL™ segment lengths
The permissible segment length is:

- Trunk: < 1000 m (3281 ft)
- Spur: < 200 m(656 ft)

… Electrical connections

Devices with Modbus RTU® communication

Note

The Modbus® protocol is an unsecured protocol (in terms of IT and cyber security), as such the intended application should be assessed to ensure that this protocol is suitable before implementation.

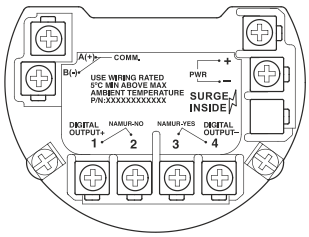

Figure 25: Terminals FSx430

Terminal	Function / comment
PWR +	Power supply
PWR –	
A (+)	Modbus interface RS485
B (–)	
DIGITAL OUTPUT 1+	Digital output, positive pole
DIGITAL OUTPUT 2	Bridge after terminal 1+, NAMUR output deactivated
DIGITAL OUTPUT 3	Bridge after terminal 4–, NAMUR output activated
DIGITAL OUTPUT 4–	Digital output, negative pole

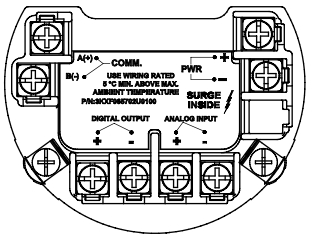

Figure 26: Terminals FSx450

Terminal	Function / comment
PWR +	Power supply
PWR –	
A (+)	Modbus interface RS485
B (–)	
DIGITAL OUTPUT +	Digital output, positive pole
DIGITAL OUTPUT –	Digital output, negative pole
ANALOG INPUT +	Analog input, positive pole
ANALOG INPUT -	Analog input, negative pole

Power supply

Devices with Modbus® communication	
Terminals	PWR + / PWR –
Supply voltage	9 to 30 V DC
Residual ripple	Maximum 5 % or U_{SS} = ±1.5 V
Power consumption	< 1 W

U_{SS} Peak-to-peak value of voltage

Digital output

For electric data of the digital output, see **Digital output – Electrical data** on page 20.

Modbus communication

Using the Modbus protocol allows devices made by different manufacturers to exchange information via the same communication bus, without the need for any special interface devices to be used.
Up to 32 devices can be connected on one Modbus line. The Modbus network can be expanded using repeaters.

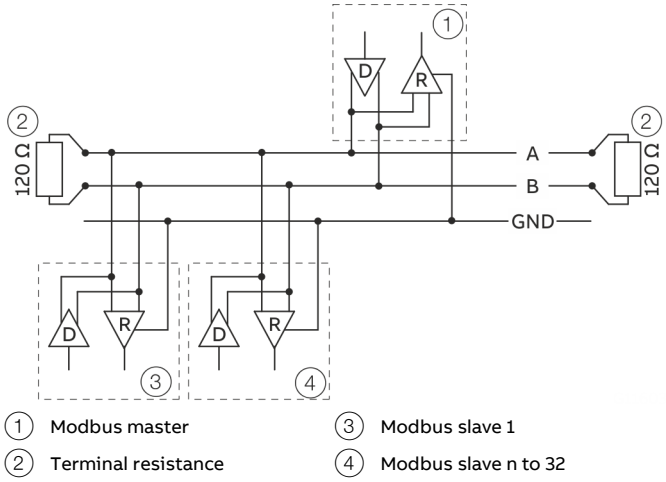

Figure 27: Modbus network (example)

Modbus interface	
Configuration	Via the Modbus interface in connection with Asset Vision Basic (DAT200) and a corresponding Device Type Manager (DTM)
Transmission	Modbus RTU - RS485 serial connection
Baud rate	1200, 2400, 4800, 9600 bps Factory setting: 9600 bps
Parity	None, even, odd Factory setting: none
Typical response time	< 100 milliseconds
Response Delay Time	0 to 200 milliseconds Factory setting: 50 milliseconds
Device address	1 to 247 Factory setting: 247
Register address offset	One base, Zero base Factory setting: One base

Cable specification

The maximum permissible length depends on the baud rate, the cable (diameter, capacity and surge impedance), the number of loads in the device chain, and the network configuration (2-core or 4-core).

- At a baud rate of 9600 and with a conductor cross-section of at least 0.14 mm^2 (AWG 26), the maximum length is 1000 m (3280 ft).
- If a four-core cable is used in a two-wire system, the maximum length must be divided in half.
- The spur lines must be short (maximum of 20 m (66 ft)).
- When using a distributor with ‘n’ connections, the maximum length of each branch is calculated as follows: 40 m (131 ft) divided by ‘n’.

The maximum cable length depends on the type of cable used. The following standard values apply:

- Up to 6 m (20 ft):
  cable with standard shielding or twisted-pair cable.
- Up to 300 m (984 ft):
  double twisted-pair cable with overall foil shielding and integrated earth cable.
- Up to 1200 m (3937 ft):
  double twisted-pair cable with individual foil shielding and integrated earth cables. Example: Belden 9729 or equivalent cable.

A category 5 cable can be used for Modbus RS485 up to a maximum length of 600 m (1968 ft). For the symmetrical pairs in RS485 systems, a surge impedance of more than 100 Ω is preferred, especially at a baud rate of 19200 and above.

… Electrical connections

Devices with PROFIBUS PA® or FOUNDATION-Fieldbus® communication

Note

The PROFIBUS PA® or FOUNDATION Fieldbus® protocols are unsecured protocols (in terms of IT or cyber security), as such the intended application should be assessed to ensure that these protocols are suitable before implementation.

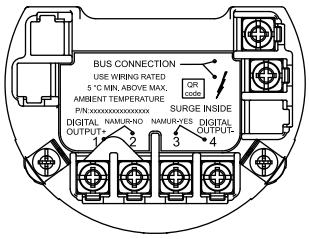

Figure 28: Terminals

Terminal	Function / comment
BUS CONNECTION	Power supply and PROFIBUS PA® /
BUS CONNECTION	FOUNDATION Fieldbus® interface
DIGITAL OUTPUT 1+*	Digital output, positive pole
DIGITAL OUTPUT 2*	Bridge after terminal 1+, NAMUR output deactivated
DIGITAL OUTPUT 3*	Bridge after terminal 4–, NAMUR output activated
DIGITAL OUTPUT 4–*	Digital output, negative pole

* Not active in devices with FOUNDATION Fieldbus® communication.

Power supply

Devices with PROFIBUS PA® or FOUNDATION Fieldbus® communication.	
Terminals	BUS CONNECTION
Supply voltage	9 to 32 V DC
Input Current	~ 10 to 20 mA

Digital output

For electric data of the digital output, see **Digital output – Electrical data** on page 20.

Cable specification

The Fieldbus cable to connect the devices with each other must fulfill the following specifications.

Loop resistance R

15 to 150 Ω/km

Inductance L

0.4 to 1 µH/km

Capacitance C

80 to 200 nF/km

Cable length

Spur line: maximum 30 m
Trunk line: maximum 1 km

Bus termination

Passive at both ends of the main bus line
(RC element R = 90 to 100 Ω, C = 0 to 2.2 µF).

PROFIBUS PA®

PROFIBUS PA® Interface	
Terminals	BUS CONNECTION
Configuration	Via the PROFIBUS PA interface or the local LCD indicator
Transmission	In accordance with IEC 61158-2
Baud rate	9.6 kbps, 19.2 kbps, 45.45 kbps, 93.75 kbps, 187.5 kbps, 500 kbps, 1.5 Mbps The baud rate is automatically detected and does not need to be configured manually
Device profile	PA Profile 3.02
Bus address	Address range 0 to 126 Factory setting: 126

A device driver in the form of a EDD (Electronic Device Description) DTM (Device Type Manager) as well as a GSD file is required for commissioning.

You can download EDD, DTM and GSD from www.abb.de/flow .

The files required for operation can also be downloaded from www.profibus.com.

ABB provides three different GSD files which can be integrated in the system.

ID number	GSD file name	Blocks
0x9700	—	1×AI
0x9740	—	1×AI, 1×TOT
0x3433	ABB_3433.gsd	4×AI, 3×AO, 1×DI, 3×TOT

Users decide at system integration whether to install the full range of functions or only part. Switching is made using the 'IdentNr Selector' parameter.

Structure and design of the function blocks

Block structure	**Supported PROFIBUS ID numbers**		
	0x3433	**0x9740**	**0x9700**
Physical Block	Slot 0	Slot 0	Slot 0
Analog Input Block (AI)	Slot 1	Slot 1	Slot 1
	Slot 2	—	—
	Slot 3	—	—
	Slot 4	—	—
Analog output block (AO)	Slot 5	—	—
	Slot 6	—	—
	Slot 7	—	—
Discrete Input Block (DI)	Slot 8	—	—
Totalizer Block (TOT)	Slot 9	Slot 9	—
	Slot 10	—	—
	Slot 11	—	—
Transducer Block-HMI	Slot 12	Slot 12	Slot 12
Transducer Block-PCB	Slot 13	Slot 13	Slot 13
Transducer Block-Standard	Slot 14	Slot 14	Slot 14

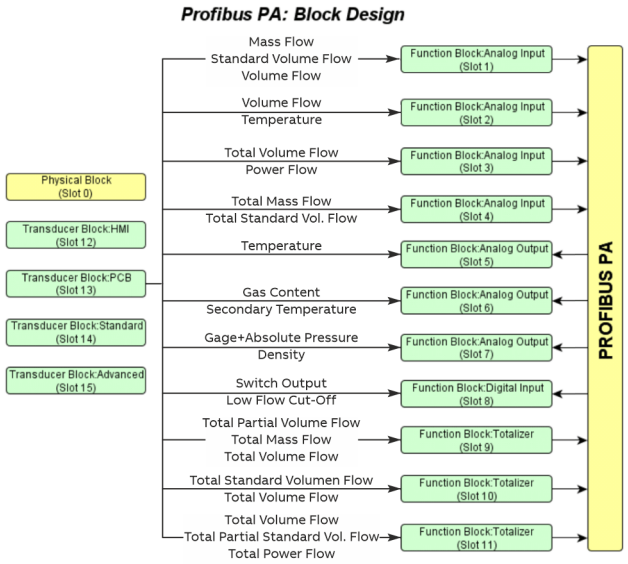

Figure 29: Design of the function blocks

Note
For additional information on the PROFIBUS PA® interface, refer to the separate COM/FSV/FSS/430/450/PB interface description!

... Electrical connections

... Devices with PROFIBUS PA® or FOUNDATION-Fieldbus® communication

FOUNDATION Fieldbus®

FOUNDATION Fieldbus® Interface	
Terminals	BUS CONNECTION
Configuration	Via the FOUNDATION Fieldbus interface or the local LCD indicator
Transmission	FOUNDATION Fieldbus H1 in accordance with IEC 61158-2
Baud rate	9.6 kbps, 19.2 kbps, 45.45 kbps, 93.75 kbps, 187.5 kbps, 500 kbps, 1.5 Mbps The baud rate is automatically detected and does not need to be configured manually
Interoperability test campaign no.	ITK 6.3.0
Manufacturer ID	0x000320
Device ID	0x12C
Bus address	Address range 0 to 126 Factory setting: 126

A device driver in the form of an EDD (Electronic Device Description) / CFF file (Common File Format) is required for commissioning purposes.

You can download the EDD and CFF at www.abb.de/flow.

The files required for operation can also be downloaded from www.fieldbus.org.

Structure and design of the function blocks

Block structure

Ordinal	Block
0	RESOURCE_2_FD
1	TB0: HMI
2	TB1: PCB
3	TB2: Standard
4	TB3: Advanced
5	AI1
6	AI2
7	AI3
8	AI4
9	AO1
10	AO2
11	AO3
12	DI
13	IT
14	EPID

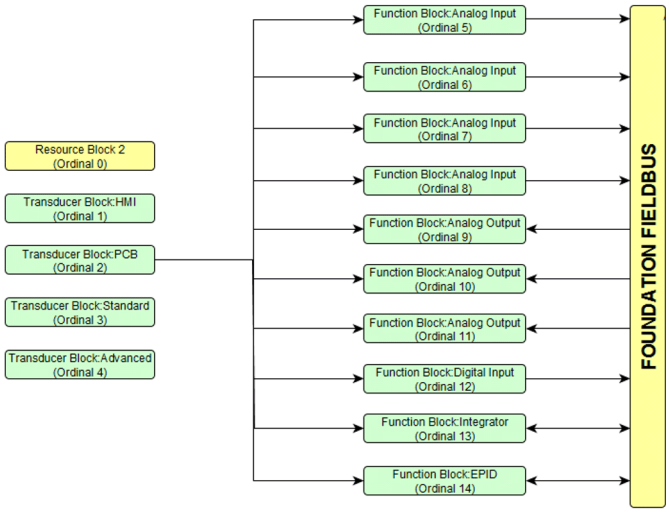

Figure 30: Design of the function blocks

FOUNDATION Fieldbus® Channel Assignment (Channel)	
AI Channel	**Process value**
1	Volume flow
2	Partial volume flow
3	Standard volume flow
4	Partial standard volume flow
5	Mass flow
6	Energy
7	Temperature
8	Volume flow counter
9	Partial volume flow counter
10	Standard volume flow counter
11	Partial standard volume flow counter
12	Mass flow counter
13	Energy counter
AO Channel	**Process value**
14	Temperature
15	Second temperature
16	Gauge pressure
17	Absolute pressure
18	Density
19	Gas content
DI Channel	
20	Switch output
21	Low flow cutoff

Note

For additional information on the FOUNDATION Fieldbus® interface, refer to the separate COM/FSV/FSS/430/450/FF interface description!

Use in potentially explosive atmospheres

Overview of explosion protection approvals

The following tables provide an overview of the approvals available for explosion protection.
Refer to the appropriate chapter for information on Ex marking as well as electric and temperature data!

Type of protection 'non-sparking' (Ex ec) and 'intrinsic safety' (Ex ic*), Zone 2, 22

Approval	Order code	Ex relevant specifications
ATEX (Europe)	B1	Refer to **Type of protection 'non-sparking' (Ex ec) and 'intrinsic safety' (Ex ic), Zone 2, 22** on page 38.
IECEx	N1	
NEPSI (China)	S2	
FM (USA and Canada)	F3	

* Only for devices with PROFIBUS PA®, FOUNDATION-Fieldbus® or Ethernet-APL™ communication.

Type of protection 'intrinsic safety' (Ex ia / IS), Zone 0, 1, 20, 21

Approval	Order code	Ex relevant specifications
ATEX (Europe)	A4	Refer to **Zone 0, 1, 20, 21 - type of protection 'intrinsically safe'** on page 42.
IECEx	N2	
NEPSI (China)	S6	
FM (USA and Canada)	F4	

Type of protection 'flameproof enclosure' (Ex db ia / XP-IS), Zone 1, 21

Approval	Order code	Ex relevant specifications
ATEX (Europe)	A9	Refer to **Type of protection 'flameproof (enclosure)' – Zone 1, 21** on page 50.
IECEx	N3	
NEPSI (China)	S1	
FM (USA and Canada)	F1	

Combined approvals

In the case of combined approvals, the user decides on the type of protection during installation.

Type of protection	Order code	Ex relevant specifications
ATEX Ex ec + Ex ia	B8 = B1 + A4	For combined approvals, the Ex relevant specification of the respective individual approvals apply.
ATEX Ex ec + Ex ia + Ex db ia	B9** = B1 + A4 + A9	
IECEx Ex ec + Ex ia	N8 = N1 + N2	
IECEx Ex ec + Ex ia + Ex db ia	N9** = N1 + N2 + N3	
NEPSI Ex ec + Ex ia	S8 = S2 + S6	
NEPSI Ex ec + Ex ia + Ex db ia	S9** = S2 + S1 + S6	
cFMus NA + IS	F8 = F3 + F4	
cFMus NA + IS + XP-IS	F9** = F3 + F4 + F1	

** Combined approvals B9, N9, S9 and F9 are only available with signal output Profibus PA (model code P1) or FOUNDATION Fieldbus (model code F1)

Temperature resistance for the connecting cable

The temperature at the cable entries of the device is dependent on the measuring medium temperature T_{medium} and the ambient temperature $T_{amb.}$.

- For electrical connection of the device, cables suited for temperatures up to 110 °C (230 °F) can be used without restriction.
- For cables suited only for temperatures up to 80 °C (176 °F), the connection of both circuits must be checked in the event of a fault. Otherwise, the restricted temperature ranges listed in the following table shall apply.

T_{amb}	T_{medium} maximum	Maximum cable temperature
−40 to 50 °C (−40 to 122 °F)	272 °C (522 °F)	80 °C (176 °F)
−40 to 40 °C (−40 to 104 °F)	400 °C (752 °F)	
−40 to 67 °C (−40 to 153 °F)	180 °C (356 °F)	

Cable glands

⚠ DANGER

Explosion hazard – Use of the devices in Zone 0 / 20

The cable glands supplied are approved for use in Zone 1.

- If the devices are used in Zone 0 / 20, the cable glands supplied must be replaced with cable glands approved for use in Zone 0.

Note

Devices with a ½” NPT thread are generally supplied without cable glands.

The devices are supplied with cable glands certified according to ATEX or IECEx.
The cable glands supplied are approved for use in Zone 1.

Please observe the following points:

- The use of standard cable glands and closures is prohibited.
- The black plugs in the cable glands are intended to provide protection during transport. Any unused cable entries must be sealed securely before commissioning.
- The outside diameter of the connection cable must measure between 6 mm (0.24 in) and 12 mm (0.47 in) to guarantee the required tightness.

Flame-resistant pipe fittings

The electrical connection for the flowmeter is made via the cable gland on the device. Alternatively, the flowmeter can be connected using an approved flame-resistant pipe fitting located directly on the device.
To do this, the existing cable gland must be removed.
When selecting suited flame-resistant pipe fittings, please note the following:

- The requirements set out in EN 50018 section 13.1 and 13.2 must be observed.
- The installation requirements set out in EN 60079-14 must be complied with when selecting pipe fittings.
- The outside diameter of the unshielded connection cable must be between 8.0 mm (0.31 in) und 11.7 mm (0.46 in).

Note

The flame-resistant pipe fitting must be assembled in accordance with the manufacturer's assembly instructions supplied with the pipe fitting.

… Use in potentially explosive atmospheres

Signal cable installation in accordance with cFMus

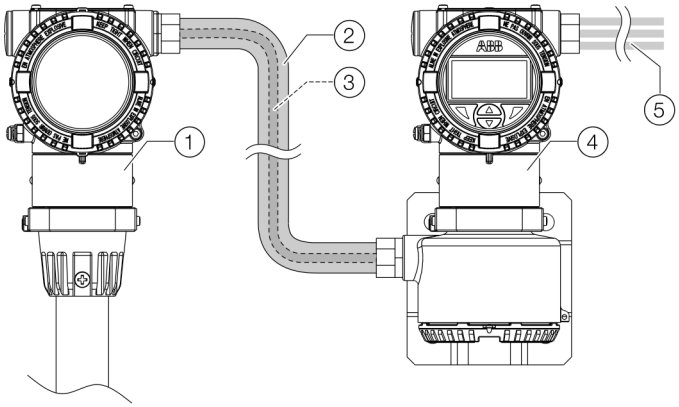

1 Sensor
2 Metal pipe system (Conduit)
3 Signal cable
4 Transmitter
5 Inputs / outputs (customer system)

Figure 31: Signal cable installation with FM/CSA

The signal cable must be installed in accordance with the FM16US0227X certificate of conformity and the National Electrical Code, 2017 edition (NFPA70), Article 501.10 (a)(1)(a) wiring methods for Class I, Division 1 in appropriately approved metal pipe systems (Conduits).
They can be stiff metal pipes with threaded screw connections or metal pipes with threads.

Electrical connections

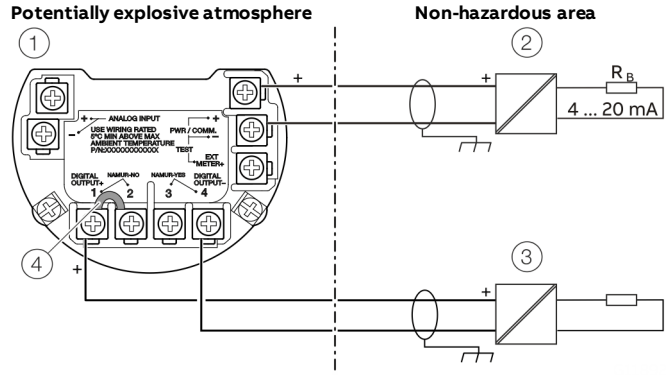

1 SwirlMaster FSS430, FSS450
2 Supply isolator
3 Switching amplifier
4 Bridge

Figure 32: Electrical connection (example)

Output configuration	Bridge
Optoelectronic coupler output	1–2
NAMUR output	3–4

Terminal	Function
PWR/COMM + / PWR/COMM –	Power supply / current output / HART® output
DIGITAL OUTPUT+ / DIGITAL OUTPUT–	Digital output as optoelectronic coupler or NAMUR output

In the factory setting, the output is configured as an optoelectronic coupler output.

If the digital output is configured as a NAMUR output, a suitable NAMUR switching amplifier must be connected.

Electrical connection – Ethernet-APL™

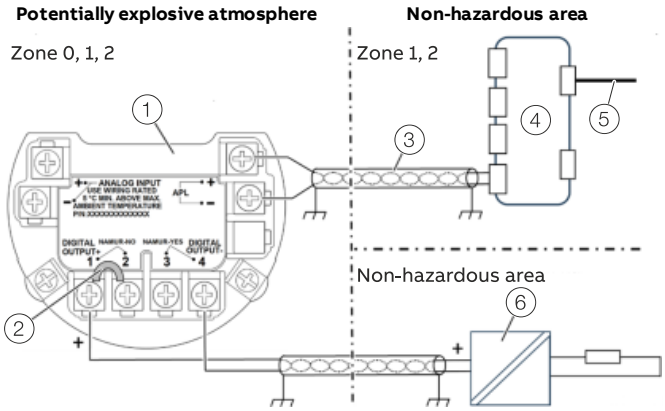

1. SwirlMaster FSS430, FSS450
2. Bridge (digital output configuration)
3. Powered Ethernet-APL spur
4. Ethernet-APL field switch
5. Ethernet-APL trunk
6. Switching amplifier

Figure 33: Electrical connection Ethernet APL (example)

Terminal	Function
APL + / APL –	APL spur power class A load port
DIGITAL OUTPUT+ / DIGITAL OUTPUT–	Digital output as optoelectronic coupler or NAMUR output

Output configuration	Bridge
Optoelectronic coupler output	1–2
NAMUR output	3–4

Electrical connection – PROFIBUS PA® / FOUNDATION Fieldbus® FISCO-Concept

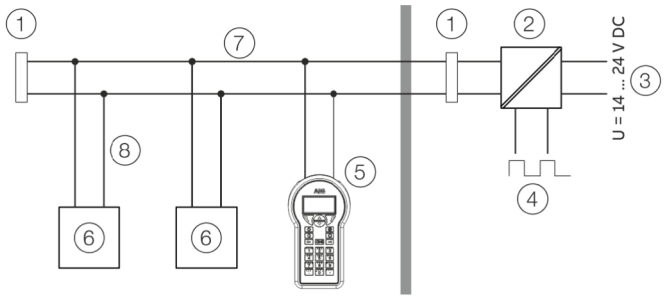

1. Bus termination
2. Power supply (Supply isolator)
3. Power supply
4. Data
5. Handheld Terminal
6. FISCO- Field Devices
7. Trunk line
8. Spur line

Figure 34: FISCO Control drawing (example)

The intrinsic safety fieldbus concept (FISCO for short) is an intrinsically safe fieldbus system for potentially explosive atmospheres.

Exclusive use of FISCO-approved intrinsically safe devices allows for simplified hookup in potentially explosive atmospheres without the need for costly intrinsic safety installation checks.

The following prerequisites must be met to this effect:

- The electric data of the supply isolator must be less / equal to the maximum permissible data of the field device, even in case of failure. (Intrinsic safety installation check)
- The unprotected residual capacity (C_i) and residual inductance (L_i) of each component connected to the fieldbus must not up-scale 5 nF / 10µH. The bus termination is excluded from this.
- Each intrinsically safe fieldbus segment must have only one power supply (supply isolator). All other components must be designed passively, while the maximum permissible leakage current per component is 50 µA.
- Devices with power supplies separated from the fieldbus must have electrical isolation between the power supply and the fieldbus.

… Use in potentially explosive atmospheres

Type of protection 'non-sparking' (Ex ec) and 'intrinsic safety' (Ex ic), Zone 2, 22

Ex marking

Note

Order code '**Explosion protection: B9, N9, F9, S9**' is only suitable with order code '**Output signal: P1 and F1' – PROFIBUS® and FOUNDATION Fieldbus®**.

ATEX / IECEx

ATEX – order code 'Explosion protection: B1, B8, B9'
Type Examination Test Certificate FM13ATEX0056X
For electrical parameters, see certificate FM13ATEX0056X
Order code 'Output signal: H1, H5, M4' – HART®, Modbus RTU®
II 3G Ex ec IIC T4 to T6 Gc
II 3 D Ex tc IIIC T95 °C Dc
Order code 'Output signal: P1, F1, A1' – PROFIBUS®, FOUNDATION Fieldbus®, Ethernet APL
II 3G Ex ic IIC T4…T6 Gc
II 3G Ex ec IIC T4 to T6 Gc
II 3 D Ex tc IIIC T95 °C Dc
FISCO Field Instrument, FF-816 (only with order code **'Output signal: P1 or F1' - PROFIBUS®, FOUNDATION Fieldbus®**)
2-WISE Power Load (only with order code '**Output signal: A1' – Ethernet APL**)

IECEx – Order code 'Explosion protection: N1, N8, N9'
Certificate of conformity IECEx FME 13.0004X
For electrical parameters, see certification IECEx FME 13.0004X
Order code 'Output signal: H1, H5, M4' – HART®, Modbus RTU®
Ex ec IIC T4 to T6 Gc
Ex tc IIIC T95 °C Dc
Order code 'Output signal: P1, F1, A1' – PROFIBUS®, FOUNDATION Fieldbus®, Ethernet APL
Ex ic IIC T4…T6 Gc
Ex ec IIC T4 to T6 Gc
Ex tc IIIC T95 °C Dc
FISCO Field Instrument, FF-816 (only with order code **'Output signal: P1 or F1' - PROFIBUS®, FOUNDATION Fieldbus®**)
2-WISE Power Load (only with order code '**Output signal: A1' – Ethernet APL**)

FM approval for USA and Canada

FM approval for USA and Canada– order code 'Explosion protection: F3, F8, F9'
Housing: TYPE 4X
Order code 'Output signal: H1, H5, M4' – HART®, Modbus RTU®
CL I, ZONE 2 AEx/Ex ec IIC T6, T5, T4
CL I/DIV 2/GP ABCD
NI CL 1/DIV 2/GP ABCD, DIP CL II, III/DIV 2/GP EFG
Order code 'Output signal: P1, F1, A1' – PROFIBUS®, FOUNDATION Fieldbus®, Ethernet APL
CL I, ZONE 2 AEx/Ex ic IIC T6, T5, T4
CL I, ZONE 2 AEx/Ex ec IIC T6, T5, T4
NI CL 1/DIV 2/GP ABCD, DIP CL II,III/DIV 2/GP EFG
FISCO Field Instrument, FF-816 (only with order code **'Output signal: P1 or F1' - PROFIBUS®, FOUNDATION Fieldbus®**)
2-WISE Power Load (only with order code '**Output signal: A1' – Ethernet APL**)

NEPSI (China)

NEPSI – order code 'Explosion protection: S2, S8, S9'
For electrical parameters, see certificate GYJ24.1066X
Order code 'Output signal: H1, H5, M4' – HART®, Modbus RTU®
Ex ec IIC T4 to T6 Gc
Ex tc IIIC T95 °C Dc
Order code 'Output signal: P1, F1, A1' – PROFIBUS®, FOUNDATION Fieldbus®, Ethernet APL
Ex ic IIC T4 to T6 Gc
Ex ec IIC T4 to T6 Gc
Ex tc IIIC T95 °C Dc
FISCO Field Instrument, FF-816 (only with order code **'Output signal: P1 or F1' - PROFIBUS®, FOUNDATION Fieldbus®**)
FISCO Field Device, 2-WISE Power Load (only with order code '**Output signal: A1' – Ethernet APL**)

Electrical Data

The symbols used in this chapter have the following meaning.

ID code	Description
U_S	Supply voltage of the device (U_{Supply})
U_M	Maximum permissible voltage ($U_{Maximum}$)
R_B	Load resistor

Power supply

- Type of protection 'Ex ec': U_S = 12 to 42 V DC
- Type of protection 'Ex ic' (Fisco): U_S = 9 to 17.5 V DC

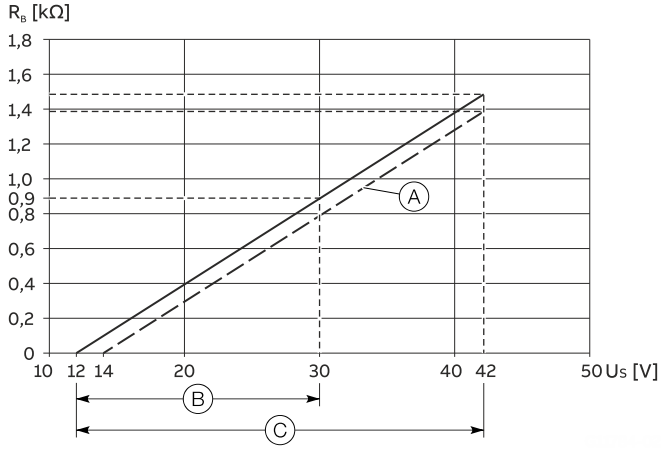

The voltage U_S = 12 V is based on a load of 0 Ω.

R_B Maximum permissible load in the power supply circuit, e.g. indicator, recorder or power resistor.

(A) For devices with order code **S1 – surge protection** or **G4 – enhanced EMC protection**

(B) Type of protection Ex ec / NI (Modbus devices)

(C) Type of protection Ex ec / NI (HART devices)

Figure 35: Power supply in Zone 2, explosion protection, non-sparking

Power supply / current output / HART®, Modbus®	
HART terminals	PWR/COMM + / PWR/COMM –
Modbus terminals	A (+), B (–) / PWR +, PWR –
U_S	HART: 45 V, Modbus: 30 V
Zone 2:	T_{amb} = –40 to xx °C*
Zone 22:	T_{amb} = –40 to 75 °C
Housing:	TYPE 4X

* The temperature xx °C depends on the temperature class T_{class}

Power supply / PROFIBUS PA®, FOUNDATION Fieldbus®	
Fieldbus terminals	BUS CONNECTION + / BUS CONNECTION –
U_M	45 V DC
Zone 2:	T_{amb} = –40 to xx °C* FISCO Field Instrument, FF-816
Zone 22 :	T_{amb} = –40 to 75 °C FISCO Field Instrument, FF-816
Housing:	TYPE 4X

* The temperature xx °C depends on the temperature class T_{class}

Power supply / Ethernet-APL™	
Fieldbus terminals	BUS CONNECTION + / BUS CONNECTION –
Zone 2	FISCO Field Device, 2-WISE Power Load $T_{amb.}$ = –40 to 85 °C*
U_M	• 17.5V for FISCO • 17.5V for liner parameters
I_{max}	380 mA
P_i	• 5.32 W for FISCO • 2.1 W for liner parameters
C_i	5 nF
L_i	10 µH

Digital output

For devices with HART®, Modbus®, PROFIBUS® and Ethernet-APL communication.

The digital output is designed as an optoelectronic coupler or NAMUR contact (in accordance with DIN 19234).

- When the NAMUR contact is closed, the internal resistance is approx. 1000 Ω.
- When the contact is open, the internal resistance is > 10 kΩ.

The digital output can be changed over to 'optoelectronic coupler' if required.

- NAMUR with switching amplifier
- Digital output Ex nA: U_B = 16 to 30 V, I_B = 2 to 30 mA

Digital output	
Terminals	DIGITAL OUTPUT 1+ / DIGITAL OUTPUT 4–
U_M	45 V
T_{amb} = –40 to 75 °C*	

* See temperature ranges in **Temperature Data** on page 40.

Analog input

Analog input	
Terminals	ANALOG INPUT + / ANALOG INPUT –
U_M	45 V
T_{amb} = –40 to 75 °C	

… Use in potentially explosive atmospheres

… Type of protection 'non-sparking' (Ex ec) and 'intrinsic safety' (Ex ic), Zone 2, 22

Special conditions

- If the type of protection of the device has **not** been marked on the name plate by the manufacturer, during installation of the device, the operator must identify the type of protection used on the name plate in a **permanent** manner!
- The painted surface become electrostatically charged. If the painted surface is relatively free of contamination such as dirt, dust or oil and the relative air humidity is > 30 %, it can become a source of ignition.
- Instructions on avoiding ignition in potentially explosive environments due to electrostatic discharges in accordance with PD CLC/TR 60079-32-1 and IEC TS 60079-32-1 must be observed!
- Cleaning of the painted surface should only be done with a damp cloth.
- It must be guaranteed that the overvoltage is limited to 140 % of the maximum operating voltage of 45 V.
- It must be powered via a galvanically isolating barrier, or the equipment and the barrier will need to be connected using a 4 mm^2 bonding conductor when using terminal board with surge
- The temperature classification is dependent on the input parameters and the process temperature. See drawing 3KXF065215U0109.
- The ambient temperature range is −40 °C to +85 °C for Ex ec and Ex tc.
- When installed using Type of Protection 'ec' the equipment shall only be used in an area of at least pollution degree 2, as defined in IEC 60664-1.

Overvoltage protection

For the devices, the client must provide an external overvoltage protection.
It must be guaranteed that the overvoltage is limited to 140 % (HART: 63 V DC, Modbus: 42 V DC) of the maximum operating voltage U_S.

Temperature Data

Operating temperature ranges

The permissible maximum ambient temperature and measuring medium temperature are dependent on each other and on the temperature class.

- The ambient temperature range T_{amb} is −40 to 85 °C (−40 to 185 °F).
- The measuring medium temperature range T_{medium} is −55 to 400 °C (−67 to 752 °F).

Devices without LCD indicator or with LCD indicator, order code LD / LE

Temperature class	T_{amb} max.	T_{medium} max.
T4	≤ 85 °C	90 °C
	≤ 82 °C	180 °C
	≤ 81 °C	280 °C
	≤ 79 °C	400 °C
T5	≤ 56 °C	90 °C
	≤ 53 °C	180 °C
	≤ 52 °C	280 °C
	≤ 50 °C	400 °C
T6	≤ 44 °C	90 °C
	≤ 41 °C	180 °C
	≤ 40 °C	280 °C
	≤ 38 °C	400 °C

Devices with LCD indicator, order code L1

Temperature class	$T_{amb.}$ max.	T_{medium} max.
T4	≤ 85 °C	90 °C
	≤ 82 °C	180 °C
	≤ 81 °C	280 °C
	≤ 79 °C	400 °C
T5, T6	≤ 40 °C	90 °C
	≤ 37 °C	180 °C
	≤ 36 °C	280 °C
	≤ 34 °C	400 °C

… Use in potentially explosive atmospheres

… Type of protection ‘non-sparking’ (Ex ec) and ‘intrinsic safety’ (Ex ic), Zone 2, 22

Devices with LCD indicator, order code L2

Temperature class	$T_{amb.}$ max.	T_{medium} max.
T4	≤ 60 °C	90 °C
	≤ 57 °C	180 °C
	≤ 56 °C	280 °C
	≤ 54 °C	400 °C
T5	≤ 56 °C	90 °C
	≤ 53 °C	180 °C
	≤ 52 °C	280 °C
	≤ 50 °C	400 °C
T6	≤ 44 °C	90 °C
	≤ 41 °C	180 °C
	≤ 40 °C	280 °C
	≤ 38 °C	400 °C

... Use in potentially explosive atmospheres

Zone 0, 1, 20, 21 - type of protection 'intrinsically safe'

Only for devices with HART®, PROFIBUS PA® or FOUNDATION Fieldbus® communication (order code 'output signal H1, H5, P1 or F1')!

Ex marking

Note

- Only for devices with HART®, PROFIBUS PA® or FOUNDATION Fieldbus® and Ethernet APL communication (order code **'Output signal: H1, H5, P1, F1, A1'**
- Order code **'Explosion protection: B9, N9, F9, S9'** is only suitable with order code **'Output signal: P1 and F1' – PROFIBUS® and FOUNDATION Fieldbus®**.

ATEX / IECEx

ATEX – order code 'Explosion protection: A4, B8, B9'	
Type examination certificate:	FM13ATEX0055X
II 1 G Ex ia IIC T4 to T6 Ga,	
II 1 G Ex ia IIC T4 Ga for output Signal 'A1'	
II 2 D Ex ia IIIC T95 °C Db	
FISCO Field Instrument, FF-816	
(only with order code **'Output signal: P1 or F1' - PROFIBUS®, FOUNDATION Fieldbus®**)	
2-WISE Power Load	
(only with order code '**Output signal: A1' – Ethernet APL**)	

IECEx – Order code 'Explosion protection: N2, N8, N9'	
Certificate of conformity	IECEx FME 13.0004X
Ex ia IIC T4 to T6 Ga,	
Ex ia IIC T4 Ga for output signal 'A1'	
Ex ia IIIC T95 °C Db	
FISCO Field Instrument, FF-816	
(only with order code **'Output signal: P1 or F1' - PROFIBUS®, FOUNDATION Fieldbus®**)	
2-WISE Power Load	
(only with order code '**Output signal: A1' – Ethernet APL**)	
For electrical parameters, see certificate IECEx FME 13.0004X	

FM approval for USA and Canada

FM approval for USA and Canada – order code 'Explosion protection: F4, F8, F9'	
IS Control Drawing:	3KXF065215U0109
IS/S. Intrinseque(Entity) CL I,	
Zone 0 AEx/Ex ia IIC T6, T5, T4,	
Zone 0 AEx/Ex ia IIC T4 for output signal 'A1'	
Cl I/Div 1/ABCD IS-CL II, III/DIV 1/EFG TYPE 4X	
FISCO Field Instrument, FF-816	
(only with order code **'Output signal: P1 or F1' - PROFIBUS®, FOUNDATION Fieldbus®**)	
2-WISE Power Load	
(only with order code '**Output signal: A1' – Ethernet APL**)	

NEPSI (China)

NEPSI – order code 'Explosion protection: S6, S8, S9'
Ex ia IIC T4 to T6 Ga,
Ex ia IIC T4 to T6 Ga for output signal 'A1'
Ex ia IIIC T95 °C Db
FISCO Field Instrument, FF-816
(only with order code **'Output signal: P1 or F1' - PROFIBUS®, FOUNDATION Fieldbus®**)
2-WISE Power Load
(only with order code '**Output signal: A1' – Ethernet APL**)
For electrical parameters, see certificate GYJ24.1066X

Electric and temperature data

The symbols used in this chapter have the following meaning.

ID code	Description
U_S	Supply voltage of the device (U_{Supply})
U_M	Maximum permissible voltage ($U_{Maximum}$)
R_B	Load resistor
I_{max}	Maximum permissible current ($I_{Maximum}$)
P_i	Maximum permissible power of the connected device
C_i	Maximum permissible inner capacity of the connected device
L_i	Maximum permissible inner inductance of the connected device

Power supply

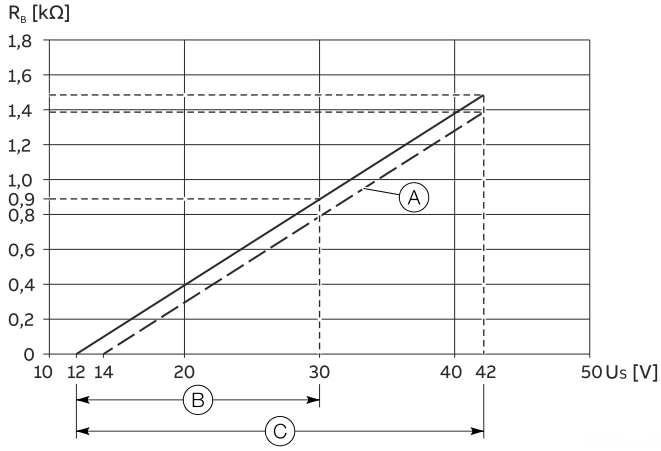

The voltage U_S = 12 V is based on a load of 0 Ω.

R_B Maximum permissible load in the power supply circuit, e.g. indicator, recorder or power resistor.

(A) For devices with order code **S1 – surge protection** or **G4 – enhanced EMC protection**

(B) Type of protection Ex ia / IS

(C) Type of protection Ex ec / NI

Figure 36: Power supply in Zone 0, 1, 20, 21 – Ex protection 'Intrinsically safe'

Power supply / current output / HART® output	
Terminals	PWR/COMM + / PWR/COMM –
Zone 0:	T_{amb} = –40 to 85 °C*
U_M	30 V
I_{max}	See **Limit value tables** on page 45
P_i	
C_i	13 nF for indicator option L1 17 nF for all other options
L_i	10 µH
Zone 20:	T_{amb} = –40 to 85 °C*

* See temperature ranges in **Limit value tables** on page 45.

Power supply and PROFIBUS PA® / FOUNDATION Fieldbus® output	
Terminals	BUS CONNECTION+ / BUS CONNECTION–
Zone 0:	FISCO Field Instrument, FF-816 $T_{amb.}$ = –40 to 85 °C*
U_M	24 V for FF-816, 17.5V for FISCO
I_{max}	See **Limit value tables** on page 45
P_i	1.2 W for FF-816, 5.32 W for FISCO
C_i	5 nF
L_i	10 µH

* See temperature ranges in **Limit value tables** on page 45.

Power supply and Ethernet APL output	
Terminals	BUS CONNECTION+ / BUS CONNECTION–
Zone 0	FISCO Field Device, 2-WISE Power Load $T_{amb.}$ = –40 to 71 °C*
U_M	• 17.5V for FISCO • 17.5V for liner parameters
I_{max}	380 mA
P_i	• 5.32 W for FISCO • 2.1 W for liner parameters
C_i	5 nF
L_i	10 µH

Digital output

The digital output is designed as an optoelectronic coupler or NAMUR contact (in accordance with DIN 19234).

- When the NAMUR contact is closed, the internal resistance is approx. 1000 Ω.
- When the NAMUR contact is open, the internal resistance is > 10 kΩ.

The digital output can be changed over to 'optoelectronic coupler' if required.

- NAMUR with switching amplifier
- Digital output: Ex ia: U_i = 30 V DC

Digital output	
Terminals	DIGITAL OUTPUT 1+ / DIGITAL OUTPUT 4–
Zone 0:	
U_{max}	30 V
I_{max}	30 mA
C_i	7 nF
L_i	0 mH
Zone 20:	T_{amb}= –40 to 85 °C*

... Use in potentially explosive atmospheres

... Zone 0, 1, 20, 21 - type of protection 'intrinsically safe'

Analog input

Analog input	
Terminals	ANALOG INPUT + / ANALOG INPUT –
Zone 0:	
U_{max}	See **Limit value tables** on page 45
I_{max}	
C_i	7 nF
L_i	0 mH
Zone 20:	T_{amb}= –40 to 85 °C*

* See temperature ranges in **Limit value tables** on page 45.

Special conditions

- If the type of protection of the device has **not** been marked on the name plate by the manufacturer, during installation of the device, the operator must identify the type of protection used on the name plate in a **permanent** manner!
- The painted surface become electrostatically charged. If the painted surface is relatively free of contamination such as dirt, dust or oil and the relative air humidity is > 30%, it can become a source of ignition.
- Instructions on avoiding ignition in potentially explosive environments due to electrostatic discharges in accordance with PD CLC/TR 60079-32-1 and IEC TS 6007932-1 must be observed! Cleaning of the painted surface should only be done with a damp cloth.
- In devices with the order option '**Housing material / cable connection – A1 or B1**', the transmitter housing is made of aluminum and can form a source of ignition through the creation of sparks due to mechanical friction or impact.
  - When working on the devices, only use tools that are approved for working with aluminum in potentially explosive atmospheres.
  - Avoid mechanical friction and impacts on aluminum components.
- It must be powered via a galvanically isolating barrier, or the equipment and the barrier will need to be connected using a 4 mm^2 bonding conductor when using terminal board with surge.
- The temperature classification is dependent on the input parameters and the process temperature. See drawing 3KXF065215U0109.

Devices with extended EMC-protection

For devices with the order code '**Optional equipment for devices – G4**', power circuits must be connected to the device through galvanically isolated safety barriers.

Devices with PROFIBUS PA® or FOUNDATION Fieldbus® output

- For devices in remote mount design, the fieldbus must be connected to the device through galvanically isolated safety barriers.
- The power supply, digital output and the analog input must be considered as separate intrinsically safe circuits.
  If the power supply, digital output and analog input are routed in a common multi core cable, the laying and installation of the cable must comply with regulations for separate intrinsically safe circuits.

Limit value tables

Operating temperature ranges

- The ambient temperature range T_{amb} of the devices is −40 to 85 °C
- The measuring medium temperature range T_{medium} is −55 to 400 °C

Devices without LCD indicator or with LCD indicator, order code 'LD, LE'

Devices with HART® communication – order code **'Output signal – H1 and H5'**

Temperature class	T_{amb} max.	U_M	I_{max}	P_i max	T_{medium} max.
Power supply, current / HART® output, analog input					
T4*	≤ 85 °C	30 V	100 mA	0.75 W	90 °C
	≤ 82 °C				180 °C
	≤ 81 °C				280 °C
	≤ 79 °C				400 °C
T4*	≤ 70 °C	30 V	160 mA	1.0 W	90 °C
	≤ 67 °C				180 °C
	≤ 66 °C				280 °C
	≤ 64 °C				400 °C
T5	≤ 56 °C	30 V	100 mA	1.4 W	90 °C
	≤ 53 °C				180 °C
	≤ 52 °C				280 °C
	≤ 50 °C				400 °C
T6	≤ 44 °C	30 V	50 mA	0.4 W	90 °C
	≤ 41 °C				180 °C
	≤ 40 °C				280 °C
	≤ 38 °C				400 °C
Digital output					
T4	≤ 85 °C	30 V	30 mA	1.0 W	90 °C
	≤ 82 °C				180 °C
	≤ 81 °C				280 °C
	≤ 79 °C				400 °C
T5	≤ 56 °C	30 V	30 mA	1.0 W	90 °C
	≤ 53 °C				180 °C
	≤ 52 °C				280 °C
	≤ 50 °C				400 °C
T6	≤ 44 °C	30 V	30 mA	1.0 W	90 °C
	≤ 41 °C				180 °C
	≤ 40 °C				280 °C
	≤ 38 °C				400 °C

* Depending on the electric data of the connected supply isolator.

... Use in potentially explosive atmospheres

... Zone 0, 1, 20, 21 - type of protection 'intrinsically safe'

Devices with LCD indicator, order code 'L1'
Devices with HART® communication – order code **'Output signal – H1 and H5'**

Temperature class	T_{amb} max.	U_M	I_{max}	T_{medium} max.
Power supply, current / HART® output, analog input				
T4*	≤ 85 °C	30 V	100 mA	90 °C
	≤ 82 °C			180 °C
	≤ 81 °C			280 °C
	≤ 79 °C			400 °C
T4*	≤ 70 °C	30 V	160 mA	90 °C
	≤ 67 °C			180 °C
	≤ 66 °C			280 °C
	≤ 64 °C			400 °C
T5	≤ 40 °C	30 V	100 mA	90 °C
	≤ 37 °C			180 °C
	≤ 36 °C			280 °C
	≤ 34 °C			400 °C
T6	≤ 40 °C	30 V	50 mA	90 °C
	≤ 37 °C			180 °C
	≤ 36 °C			280 °C
	≤ 34 °C			400 °C
Digital output				
T4	≤ 85 °C	30 V	30 mA	90 °C
	≤ 82 °C			180 °C
	≤ 81 °C			280 °C
	≤ 79 °C			400 °C
T5	≤ 40 °C	30 V	30 mA	90 °C
	≤ 37 °C			180 °C
	≤ 36 °C			280 °C
	≤ 34 °C			400 °C
T6	≤ 40 °C	30 V	30 mA	90 °C
	≤ 37 °C			180 °C
	≤ 36 °C			280 °C
	≤ 34 °C			400 °C

* Depending on the electric data of the connected supply isolator.

Devices with LCD indicator, order code 'L2' (operation through the front glass)
Devices with HART® communication – order code **'Output signal – H1 and H5'**

Temperature class	T_{amb} max.	U_{Mx}	I_{max}	P_i max	T_{medium} max.
Power supply, current / HART® output, analog input					
T4*	≤ 60 °C	30 V	100 mA	0.75 W	90 °C
	≤ 57 °C				180 °C
	≤ 56 °C				280 °C
	≤ 54 °C				400 °C
T4*	≤ 60 °C	30 V	160 mA	1.0 W	90 °C
	≤ 57 °C				180 °C
	≤ 56 °C				280 °C
	≤ 54 °C				400 °C
T5	≤ 56 °C	30 V	100 mA	1.4 W	90 °C
	≤ 53 °C				180 °C
	≤ 52 °C				280 °C
	≤ 50 °C				400 °C
T6	≤ 44 °C	30 V	50 mA	0.4 W	90 °C
	≤ 41 °C				180 °C
	≤ 40 °C				280 °C
	≤ 38 °C				400 °C
Digital output					
T4	≤ 60 °C	30 V	30 mA	1.0 W	90 °C
	≤ 57 °C				180 °C
	≤ 56 °C				280 °C
	≤ 54 °C				400 °C
T5	≤ 56 °C	30 V	30 mA	1.0 W	90 °C
	≤ 53 °C				180 °C
	≤ 52 °C				280 °C
	≤ 50 °C				400 °C
T6	≤ 44 °C	30 V	30 mA	1.0 W	90 °C
	≤ 41 °C				180 °C
	≤ 40 °C				280 °C
	≤ 38 °C				400 °C

* Depending on the electric data of the connected supply isolator.

… Use in potentially explosive atmospheres

… Zone 0, 1, 20, 21 - type of protection 'intrinsically safe'

Devices with PROFIBUS PA® or FOUNDATION Fieldbus® communication – order code **'Output signal – P1 and F1'**

Temperature class	T_{amb} max.	U_M	I_{max}	P_i max	T_{medium} max.
Power supply					
T4	≤ 85 °C				90 °C
	≤ 82 °C				180 °C
	≤ 81 °C				280 °C
	≤ 79 °C				400 °C
T5, T6	≤ 40 °C				90 °C
	≤ 37 °C				180 °C
	≤ 36 °C				280 °C
	≤ 34 °C				400 °C
Digital output					
T4	≤ 85 °C	30 V	30 mA	1.0 W	90 °C
	≤ 82 °C				180 °C
	≤ 81 °C				280 °C
	≤ 79 °C				400 °C
T5, T6	≤ 40 °C	30 V	30 mA	1.0 W	90 °C
	≤ 37 °C				180 °C
	≤ 36 °C				280 °C
	≤ 34 °C				400 °C
Analog input					
T4*	≤ 85 °C	30 V	100 mA	0.75 W	90 °C
	≤ 82 °C				180 °C
	≤ 81 °C				280 °C
	≤ 79 °C				400 °C
T4*	≤ 70 °C	30 V	160 mA	1.0 W	90 °C
	≤ 67 °C				180 °C
	≤ 66 °C				280 °C
	≤ 64 °C				400 °C
T5	≤ 40 °C	30 V	100 mA	1.4 W	90 °C
	≤ 37 °C				180 °C
	≤ 36 °C				280 °C
	≤ 34 °C				400 °C
T6	≤ 40 °C	30 V	50 mA	0.4 W	90 °C
	≤ 37 °C				180 °C
	≤ 36 °C				280 °C
	≤ 34 °C				400 °C

* Depending on the electric data of the connected supply isolator.

Devices with Ethernet-APL™ communication – order code **'Output signal – A1'**

Temperature class	T_{amb} max.	U_M	I_{max}	P_i max	T_{medium} max.
Power supply					
T4	≤ 71 °C				70 °C
	≤ 69 °C				90 °C
	≤ 66 °C				180 °C
	≤ 63 °C				280 °C
	≤ 60 °C				400 °C
Digital output					
T4	≤ 71 °C	30 V	30 mA	1.0 W	70 °C
	≤ 69 °C				90 °C
	≤ 66 °C				180 °C
	≤ 63 °C				280 °C
	≤ 60 °C				400 °C
Analog input					
T4*	≤ 71 °C	30 V	100 mA	0.75 W	70 °C
	≤ 69 °C				90 °C
	≤ 66 °C				180 °C
	≤ 63 °C				280 °C
	≤ 60 °C				400 °C
T4*	≤ 71 °C	30 V	160 mA	1.0 W	70 °C
	≤ 69 °C				90 °C
	≤ 66 °C				180 °C
	≤ 63 °C				280 °C
	≤ 60 °C				400 °C

* Depending on the electric data of the connected supply isolator.

… Use in potentially explosive atmospheres

Type of protection 'flameproof (enclosure)' – Zone 1, 21

Ex marking

Note

Order code '**Explosion protection: B9, N9, F9, S9**' is only suitable with order code '**Output signal: P1 and F1' – PROFIBUS® and FOUNDATION Fieldbus®**.

ATEX / IECEx

ATEX – order code 'Explosion protection: A9, B9'	
Type Examination Test Certificate	FM13ATEX0057X
II 2 G Ex db ia IIC T6 Gb/Ga – II 2 D Ex tb IIIC T85 °C Db	
(−40 °C < Ta < +75 °C) supply voltage 42 V DC,	
Um: 45 V	

IECEx – order code 'Explosion protection: N3, N9'	
Certificate of conformity	IECEx FME 13.0004X
Ex db ia IIC T6 Gb/Ga-Ex tb IIIC T85 °C Db	
(−40 °C < Ta < +75 °C) supply voltage 42 V DC,	
Um = 45 V	

FM approval for USA and Canada

FM approval for USA and Canada – order code 'Explosion protection: F1, F9'
XP-IS (US) CL I/DIV I/GP BCD, DIP CL II, III/DIV I/GP EFG
XP-IS (Canada) CL I/DIV I/GP BCD, DIP CL II, III/DIV I/GP EFG
CL I, ZONE 1, AEx/Ex d ia IIC T6 −40 °C < Ta < +75 °C
TYPE 4X Tamb = 75 °C 'Dual seal device'

NEPSI (China)

NEPSI – order code 'Explosion protection: S1, S9'
Ex db ia IIC T6 Gb/Ga
Ex tb IIIC T85 °C Db
For electrical parameters, see certificate GYJ24.1066X

Electric and temperature data

The symbols used in this chapter have the following meaning.

ID code	Description
U_S	Supply voltage of the device (U_{Supply})
U_M	Maximum permissible voltage ($U_{Maximum}$)
R_B	Load resistor

Power supply

Ex d ia Gb/Ga:

U_S= 12 to 42 V DC

Note

- The power supply and the digital output must be either only intrinsically safe or only non-intrinsically safe. A combination is not permitted.
- Intrinsically safe circuits must have potential equalization in place along the entire length of the cable of the circuit.

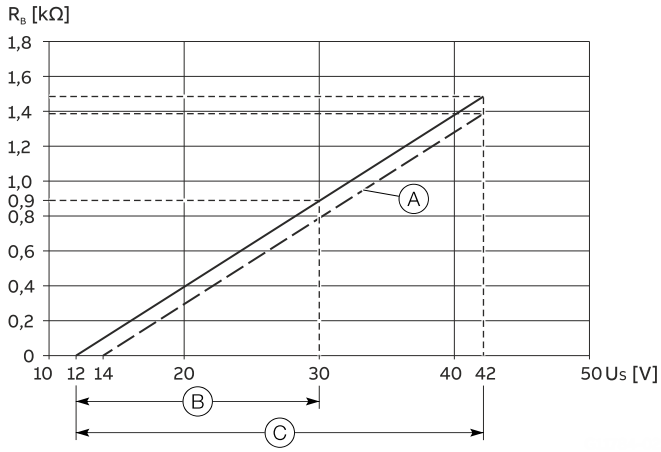

The voltage U_S = 12 V is based on a load of 0 Ω.

R_B Maximum permissible load in the power supply circuit, e.g. indicator, recorder or power resistor.

(A) For devices with order code **S1 – surge protection** or **G4 – enhanced EMC protection**

(B) Type of protection Ex ec, ia / NI, IS (Modbus devices)

(C) Type of protection Ex ec, d, ia / NI, IS (HART devices)

Figure 37: Power supply in Zone 1, explosion protection

Power supply / current output / HART® output, Modbus®	
HART terminals	PWR/COMM + / PWR/COMM −
Modbus terminals	A (+), B (−) / PWR +, PWR −
U_M	HART: 45 V, Modbus: 30 V
T_{amb}	−40 to 75 °C

Digital output

The digital output is designed as an optoelectronic coupler or NAMUR contact (in accordance with DIN 19234).

- When the NAMUR contact is closed, the internal resistance is approx. 1000 Ω.
- When the NAMUR contact is open, the internal resistance is > 10 kΩ.

The digital output can be changed over to 'optoelectronic coupler' if required.

- NAMUR with switching amplifier
- Digital output: Ex d ia: U_M = 45 V

Digital output	
Terminals	DIGITAL OUTPUT 1+ / DIGITAL OUTPUT 4–
U_M	45 V
T_{amb}	–40 to 75 °C

Analog input

Analog input	
Terminals	ANALOG INPUT + / ANALOG INPUT –
U_M	45 V
T_{amb}	–40 to 75 °C

Special conditions

- If the type of protection of the device has **not** been marked on the name plate by the manufacturer, during installation of the device, the operator must identify the type of protection used on the name plate in a **permanent** manner!
- Consult the manufacturer if dimensional information on the flameproof joints is necessary.
- The painted surface become electrostatically charged. If the painted surface is relatively free of contamination such as dirt, dust or oil and the relative air humidity is > 30%, it can become a source of ignition.
- Instructions on avoiding ignition in potentially explosive environments due to electrostatic discharges in accordance with PD CLC/TR 60079-32-1 and IEC TS 60079-32-1 must be observed!
- Cleaning of the painted surface should only be done with a damp cloth.
- In devices with the order option 'Housing material / cable connection – A1 or B1', the transmitter housing is made of aluminum and can form a source of ignition through the creation of sparks due to mechanical friction or impact.
  - When working on the devices, only use tools that are approved for working with aluminum in potentially explosive atmospheres.
  - Avoid mechanical friction and impacts on aluminum components.

Repair

Devices of explosion protection class of 'flameproof enclosure / Flameproof enclosure' are equipped with flameproof open joints in the housing.
Contact ABB before commencing repair work.

Ordering Information

SwirlMaster FSS430, FSS450

Base model								
SwirlMaster FSS430 Swirl Flowmeter	**FSS430**	**XX**	**XX**	**XXXXXX**	XX	XX	XX	XX
SwirlMaster FSS450 Intelligent Swirl Flowmeter	**FSS450**	**XX**	**XX**	**XXXXXX**	XX	XX	XX	XX
Explosion Protection Certification								
Without		Y0						
ATEX non sparking / intrinsic safety (Ex ec/ ic, Zone 2 / 22)		B1						
ATEX intrinsic safety (Ex ia, Zone 0 / 1 / 20 / 21)		A4						
ATEX explosion proof (Ex db ia, Zone 1 / 21)		A9						
ATEX combined B1 + A4 (Ex ec + Ex ia)		B8						
ATEX combined B1 + A4 + A9 (Ex ec + Ex ia + Ex d)		B9[10)]						
IECEx non sparking (Zone 2 / 22)		N1						
IECEx intrinsic safety (Zone 0 / 1 / 20 / 21)		N2						
IECEx explosion proof (Zone 1 / 21)		N3						
IECEx combined N1 + N2 (Ex ec + Ex ia)		N8						
IECEx combined N1 + N2 + N3 (Ex ec + Ex ia + Ex d)		N9[10)]						
cFMus explosion proof Cl1 Div 1		F1						
cFMus intrinsic safety Cl1 Div 1		F4						
cFMus non sparking and intrinsic safety Cl1 Div 2		F3						
cFMus combined F3 + F4 (NI + IS)		F8						
cFMus combined F3 + F4 + F1 (NI + IS +XP)		F9[10)]						
NEPSI flameproof (enclosure) (Zone 1 / 21)		S1[1)]						
NEPSI non sparking and intrinsic safety (Zone 2 / 22)		S2[1)]						
NEPSI intrinsic safety (Zone 0 / 1 / 20 / 21)		S6[1)]						
NEPSI combined S2 + S6 (Ex ec/ic + Ex ia)		S8[1)]						
NEPSI combined S1 + S2 + S6 (Ex ec/ic + Ex ia + Ex d)		S9[1), 10)]						
System Design								
Integral single sensor			C1					
Remote single sensor, 5 m (16 ft) signal cable included			R1					
Integral dual sensor			C2[2)]					
Remote dual sensor, 2 x 5 m (16 ft) signal cable included			R2[2)]					
Process Connection Type / Meter Size / Connection Size								
Flange / DN 15 (½ in) / DN 15 (½ in)				F015R0				
Flange / DN 20 (¾ in) / DN 20 (¾ in)				F020R0				
Flange / DN 25 (1 in.) / DN 25 (1 in.)				F025R0				
Flange / DN 32 (1¼ in) / DN 32 (1¼ in)				F032R0				
Flange / DN 40 (1½ in) / DN 40 (1½ in)				F040R0				
Flange / DN 50 (2 in) / DN 50 (2 in)				F050R0				
Flange / DN 80 (3 in) / DN 80 (3 in)				F080R0				
Flange / DN 100 (4 in) / DN 100 (4 in)				F100R0				
Flange / DN 150 (6 in) / DN 150 (6 in)				F150R0				
Flange / DN 200 (8 in) / DN 200 (8 in)				F200R0				
Flange / DN 300 (12 in) / DN 300 (12 in)				F300R0				

1) Only available from Shanghai factory

2) For meter size DN 50 (2 in) and larger only

10) Only available with order code **'Output Signal F1 or P1'**

Continuation see next page

Base model				
SwirlMaster FSS430 Swirl Flowmeter	**XX**	**XX**	**XX**	**XX**
SwirlMaster FSS450 Intelligent Swirl Flowmeter	**XX**	**XX**	**XX**	**XX**
Pressure Rating				
PN 10	D1			
PN 16	D2			
PN 25	D3			
PN 40	D4			
PN 63	D5			
PN 100	D6			
PN 160	D7			
ASME CL 150	A1			
ASME CL 300	A3			
ASME CL 600	A6			
ASME CL 900	A7			
Others	Z9			
Sensor Temperature Range				
Standard (max 280 °C / 536 °F)		A1		
Housing Material / Cable Glands				
Aluminium / 2 pcs. metric, M20 × 1.5, cable glands mounted			A1[3)]	
Aluminium / 2 pcs. ½ in NPT threads, cable glands not included			B1	
Stainless steel 316L / 2 pcs. metric, M20 × 1.5, cable glands mounted			S1[3)]	
Stainless steel 316L / 2 pcs. ½ in NPT threads, cable glands not included			T1	
Output Signal				
HART digital communication and 4 to 20 mA				H1
HART digital communication, 4 to 20 mA + digital contact output				H5
Modbus communication with digital contact output				M4[4)]
PROFIBUS PA®				P1
FOUNDATION fieldbus®				F1
Ethernet-APL				A1

3) Not available for type of protection cFMus ‘XP’

4) Not available for type of protection ‘intrinsic safety’

Continuation see next page

… Ordering Information

… SwirlMaster FSS430, FSS450

Additional ordering information

SwirlMaster FSS430 Swirl Flowmeter	**XX**	**XXX**	**XXX**	**XXX**	**XXX**	**XX**	**XX**	**XXX**
SwirlMaster FSS450 Intelligent Swirl Flowmeter	**XX**	**XXX**	**XXX**	**XXX**	**XXX**	**XX**	**XX**	**XXX**
Integrated Digital Display (LCD)								
With Display and Glass Cover	L1							
With Integrated LCD Display with Push Buttons TTG	L2[5)]							
SmartHMI-with backlight & new TTG operation	LE[6)]							
Piezo Sensor Sealing Material								
PTFE (−20 to 260 °C / −4 to 500 °F)		SP0						
Kalrez® 6375 (−20 to 275 °C / −4 to 527 °F)		SP1						
Graphite (−55 to 280 °C / −67 to 536 °F)		SP2						
Communication Option activated								
Webserver Only relevant with Ethernet-APL output signal			GCW					
Profinet Only relevant with Ethernet-APL output signal			GCP					
Modbus TCP Only relevant with Ethernet-APL output signal			GCM					
Ambient Temperature Range								
Extended −40 to 85 °C (−40 to 185 °F)				TA4				
Signal Cable Length								
10 m (approx. 32 ft) (For remote sensor only)					SC2			
20 m (approx. 64 ft) (For remote sensor only)					SC4			
30 m (approx. 96 ft) (For remote sensor only)					SC6			
Calibration Type								
5-point calibration						R5		
Surge / Transient Protector								
With integral surge / transient protector							S1[7)]	
Sensor Material								
Piezo sensor material Hastelloy C-4								SM1
All inner parts material Hastelloy C-4								SM2
All wetted parts material Hastelloy C-4								SM3

5) Only available with order code **'Output Signal M4, F1 or P1'**

6) Only available with order code **'Output Signal H1, H5 or A1'**

7) Not available with order code **'Hardware Options G4 – Increased EMC protection'**, mandatory for **'Output signal P1 and F1'**

Continuation see next page

Additional ordering information							
SwirlMaster FSS430 Swirl Flowmeter	**XX**	**XXX**	**XX**	**XXX**	**XX**	**XX**	**XX**
SwirlMaster FSS450 Intelligent Swirl Flowmeter	**XX**	**XXX**	**XX**	**XXX**	**XX**	**XX**	**XX**
Certificates							
Material monitoring with inspection certificate 3.1 acc. EN 10204	C2						
Material monitoring NACE MR 01-75 with inspection certificate 3.1 acc. EN 10204	CN						
Declaration of compliance with the order 2.1 acc. EN 10204	C4						
Inspection certificate 3.1 acc. EN 10204 of visual, dimensional and functional test	C6						
Inspection certificate 3.1 acc. EN 10204 of positive material identification PMI with material analysis	C5						
Inspection certificate 3.1 acc. EN 10204 of positive material identification PMI	CA						
Pressure test acc. to factory test plan	CB						
Test package (pressure test, non-destructive test, welder an welding procedure certificate)	CT						
SIL2 Declaration of Conformity (Only available with Output Signal H5 and Hardware Option G4)	CS						
Device Identification Plate / Certification and Tag Plate							
Stainless steel / Adhesive label plus wired-on SST plate		TCS					
Others		TCZ					
Documentation Language							
German			M1				
English			M5				
Chinese			M6				
Russian			MB				
Language package Western Europe / Scandinavia			MW				
Language package Eastern Europe			ME				
Configuration Type							
Parameters set to factory default				NC1			
Parameters set customer specific				NCC			
Special Applications							
Sensor degreased and bagged					P1		
Hardware Options							
Integral RTD						G1[8)]	
Increased EMC protection (Only available with Output Signal H5)						G4	
Operation Mode							
Energy flow							N1[9)]

8) Optional for VortexMaster FSV430, standard for VortexMaster FSV450

9) Only for VortexMaster FSV450

Questionnaire

Customer:	**Date:**
Ms. / Mr.:	**Department:**
Telephone:	**Fax:**

Measuring system:	☐ SwirlMaster FSS430 ☐ SwirlMaster FSS450	**Optional** ☐ Integrated resistance thermometer Pt100 ☐ Digital output (switch, pulse, frequency output) (with integrated Pt100 resistance thermometer, binary output, analog input and flow computer unit functionality)

Measuring medium: (Aggregate state)	_____	☐ Liquid	☐ Gas	☐ Saturated steam	☐ Overheated steam
Flow rate: (min., max., operating point)	_____	**Operating condition** ☐ m^3/h ☐ US gal/min	**Standard condition** ☐ m^3/h ☐ ft^3/h	**Mass** ☐ kg/h ☐ lb/h	**Energy** ☐ kW ☐ MJ/h
Density: (min., max., operating point)	_____	☐ kg/m^3 ☐ lb/ft^3	☐ Operating condition ☐ Standard condition		
Viscosity:	_____	☐ mPas/cP ☐ cst			
Measuring medium temperature (min., max., operating point)	_____	☐ °C ☐ °F			
Ambient temperature:	_____	☐ °C ☐ °F			
Pressure: (min., max., operating point)	_____	☐ bar ☐ psi			
Nominal diameter / pressure rating of the piping:	_____	☐ DN ☐ PN			
Effective inside diameter of the piping:	_____	☐ mm			

Transmitter design / communication:	☐ 4 to 20 mA, HART® (FSS430 / FSS450)	☐ Modbus® RTU (FSS430)	☐ PROFIBUS PA®	☐ FOUNDATION Fieldbus®
Explosion protection:	☐ Without ☐ Zones 2, 22 / Cl. 1, Div. 2		☐ Zones 0, 1, 20, 21 / Div. 1 (Ex ia / IS) ☐ Zone 0, 1, 20, 21 / Div. 1 (Ex d / XP)	

Trademarks

Bluetooth is a registered trademarks of Bluetooth Special Interest Group (SIG)

HART is a registered trademark of FieldComm Group, Austin, Texas, USA

Ethernet-APL is a trademark of the FieldComm Group, ODVA Inc., OPC Foundation and PROFIBUS Nutzerorganisation e.V.

Modbus is a registered trademark of Schneider Automation Inc.

PROFIBUS and PROFIBUS PA are registered trademarks of PROFIBUS & PROFINET International (PI)

FOUNDATION Fieldbus is a registered trademark of FieldComm Group, Austin, Texas, USA.

Kalrez and Kalrez Spectrum are registered trademarks of DuPont Performance Elastomers.

Hastelloy C is a trademark of Haynes International

Sales

Service

Notes

ABB Measurement & Analytics

For your local ABB contact, visit:
www.abb.com/contacts

For more product information, visit:
www.abb.com/flow

We reserve the right to make technical changes or modify the contents of this document without prior notice. With regard to purchase orders, the agreed particulars shall prevail.
ABB does not accept any responsibility whatsoever for potential errors or possible lack of information in this document.

We reserve all rights in this document and in the subject matter and illustrations contained therein. Any reproduction, disclosure to third parties or utilization of its contents – in whole or in parts – is forbidden without prior written consent of ABB.

© ABB 2025

3KXF320001R1001

DS/FSS430/450-EN Rev. I 08.2025