TFE Lined Straight Through Varea-Meter® Unit
With Magnetic Indicator with External General Purpose Flow Switch

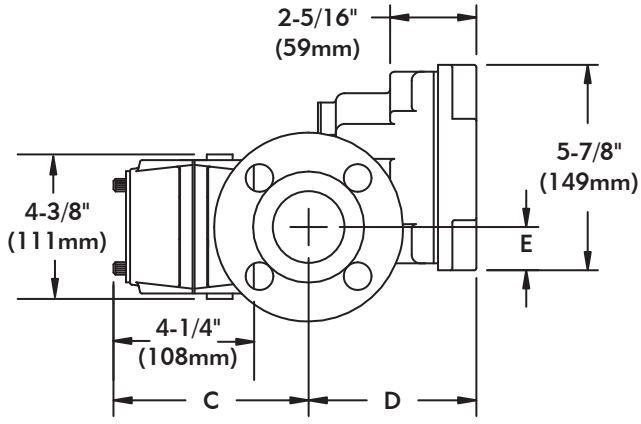

PLAN VIEW

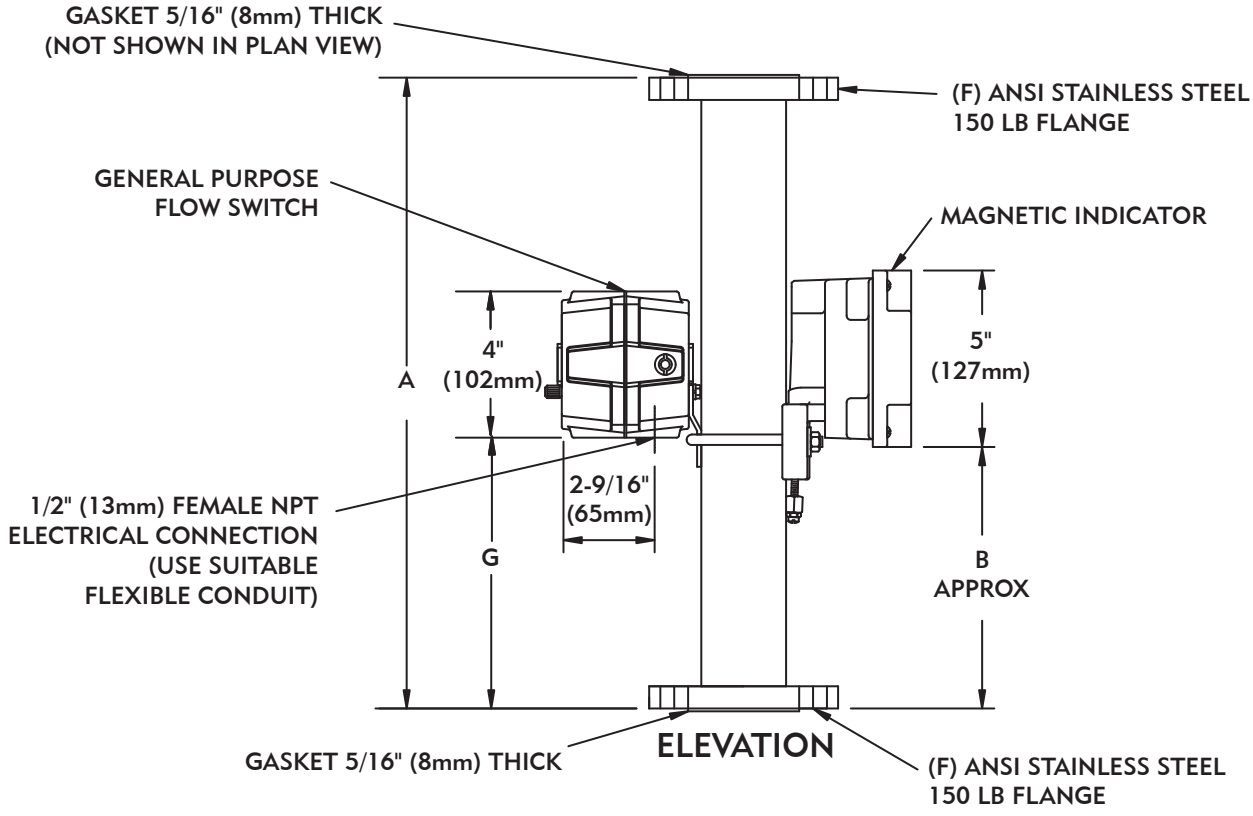

ELEVATION

SIEMENS

Water Technologies
1901 West Garden Road
Vineland, NJ 08360
856.507.9000 phone
856.507.4125 fax

www.siemens.com/water

Dimensions
WT.520.215.102.UA.CN.1206